YAMAHA

PARTS LIST

MODEL TT500C

NOTICE

ALL PART NUMBERS CONTAINED IN THIS CATALOGUE ARE COMPRISED OF TEN DIGITS. WHEN ORDERING, PLEASE ADD TWO ZEROS TO THE END OF EACH PART NUMBER REQUIRED TO CONVERT THE TEN DIGITS INTO THE NEW TWELVE DIGIT NUMBERS.

YAMAHA MOTOR CO., LTD.

COPY RIGHT: ALL RIGHTS RESERVED
NO PART OF THIS PUBLICATION MAY BE REPRODUCED WITHOUT PERMISSION.

YAMAHA

PARTS LIST

MODEL TT500C

500
YAMAHA

500
YAMAHA

FOREWORD

This Parts List related to the parts in use for the YAMAHA TT500C. When you ordering replacement parts for th TT500C, refer to this Parts List and quote both part numbers and part names correctly.

1. Structure of Part No.

Yamaha parts are divided largely into two categories; general parts and standard parts, and each part No. has the following structure:

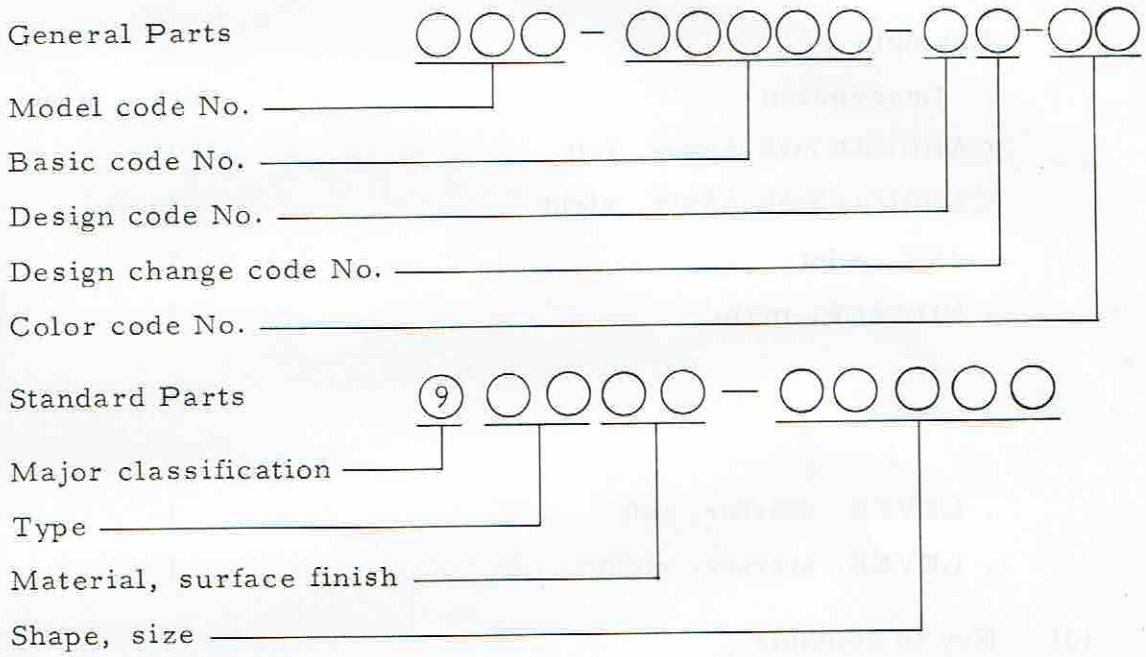

Note: Every standard No. begins with 9.

2. How to Use this Parts List

(1) Except for steel balls (whose size is indicated in inches), the size of all parts is indicated in millimeters in the following manner.

Hose (rubber or vinyl)	Inside diameter - length
O-ring	Section area - inside diameter
Washer, shim, collar	Inside diameter - outside diameter - thickness (length)

(2) Parts, which are to be supplied in the form of assemblies, are listed with an indention of one letter's space, and a dot (.) is put

against the name of each part. If any two different assemblies (e.g., right and left side components) consist of almost the same type components, these two assemblies are listed in two lines, and then the names of component parts are listed in the subsequent lines with an indention as mentioned earlier. The quantity of parts is given in the following manner; that is, in the case of parts being the same in type between the right and left, a total quantity of parts is given. On the other hand, if the right and left side parts are different in type, the quantity of part(s) on each side is given.

Example

Description	Q'ty
CARBURETOR ASS'Y, left	1
CARBURETOR ASS'Y, right	1
. JET, pilot	2
. NOZZLE, main	2
⋮	
. LEVER, starter, left	1
. LEVER, starter, right	1

(3) Key to Symbols

U.R. ..... Use size (thickness) and/or number as required
U.N. ..... Use as many as you need
T ..... Number of teeth in a gear
V ..... Voltage for light bulbs
S ..... "S" type oil seal or "S" type circlip
SD ..... "SD" type oil seal
SO ..... "SO" type oil seal
SW ..... "SW" type oil seal
E ..... "E" type circlip
R ..... "R" type circlip
F/No. ..... Frame No. (Applicable machine No.)

(4) The right and left in relation to parts are determined on the basis of the rider facing toward the front.

(5) This Parts List is based on the model in the production line on Jul., 10, 1975. Accordingly, if any modifications which have been made to parts will be announced in the Yamaha Parts News. It is advisable that according to the Yamaha Parts News, You will make necessary corrections to the Parts List on hand to keep it up-to dated.

CONTENTS

ENGINE

Fig. 1	Cylinder Head · Cylinder Head Cover	1
Fig. 2	Cylinder	3
Fig. 3	Crank · Piston	5
Fig. 4	Valve · Rocker Arm	9
Fig. 5	Camshaft · Chain Tensioner	11
Fig. 6	Crankcase	13
Fig. 7	Crankcase Cover	15
Fig. 8	Oil Pump · Oil Cleaner	17
Fig. 9	Contact Breaker · Governor	19
Fig. 10	Clutch	21
Fig. 11	Transmission	23
Fig. 12	Shifter 1	27
Fig. 13	Shifter 2	29
Fig. 14	Kick Starter	31
Fig. 15	Intake	33
Fig. 16	Carburetor	35
Fig. 17	Exhaust	41
Fig. 18	Flywheel Magneto	43

CHASSIS

Fig. 19	Frame · Side Cover	47
Fig. 20	Stand · Footrest · Brake Pedal	51
Fig. 21	Rear Arm · Rear Cushion	55
Fig. 22	Front Fender · Rear Fender	57
Fig. 23	Front Fork	59
Fig. 24	Steering	63
Fig. 25	Handle · Wire	65
Fig. 26	Fuel Tank	69
Fig. 27	Seat	71

Fig. 28 Front Wheel 73
Fig. 29 Rear Wheel 75
Fig. 30 Electrical 79

NUMERICAL INDEX

ENGINE

YAMAHA
PARTS

Fig. 1 CYLINDER HEAD · CYLINDER HEAD COVER

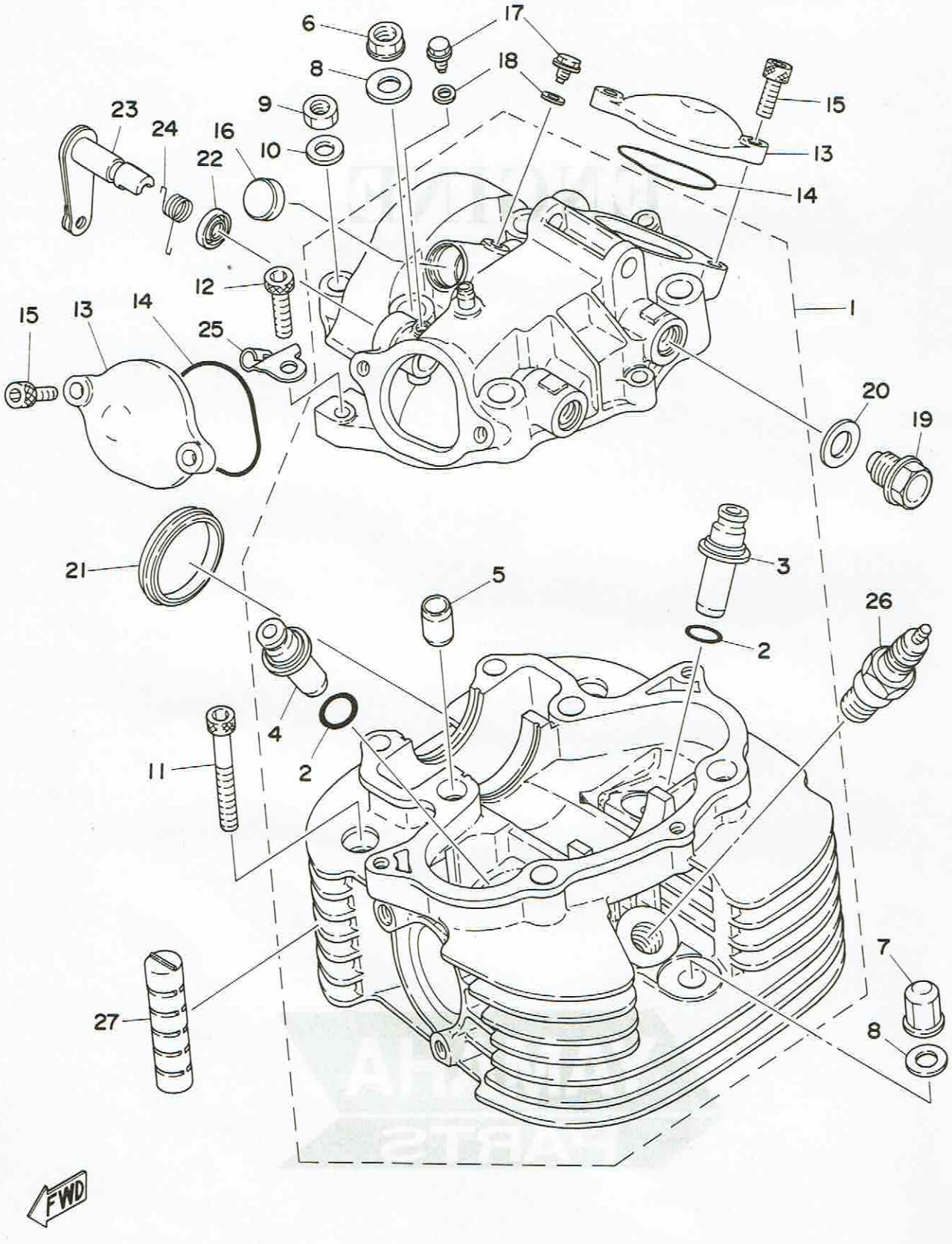

Ref. No.	Parts No.	Description	Q'ty	Applicable Machine No.	Remarks
1- 1	583-11110-00-R4	CYLINDER HEAD ASS'Y	1		
2	93210-14299	. O-RING (1.5-13.8)	2		
3	583-11133-10	. GUIDE, intake valve (1st O.S)	1		
4	583-11134-10	. GUIDE, exhaust valve (1st O.S)	1		
5	91810-16016	. PIN, dowel	2		
6	90179-10204	NUT	4		
7	90179-10207	NUT	1		
8	90201-10124	WASHER, plate (371-11175-00)	5		
9	95303-08600	NUT	2		
10	92901-08600	WASHER, plate	2		
11	91316-06055	BOLT, hexagon socket head	2		
12	91316-06025	BOLT, hexagon socket head	3		
13	583-11186-00-R4	COVER, cylinder head side	2		
14	93210-49296	O-RING (3.0-48.5)	2		
15	91316-06018	BOLT, hexagon socket head	4		
16	90338-18067	PLUG	1		
17	90109-06418	BOLT	2		
18	90430-06014	GASKET (256-11396-00)	2		
19	90340-14038	PLUG	2		
20	90430-14043	GASKET (256-13167-00)	2		
21	90338-47065	PLUG	1		
22	93104-12054	OIL SEAL (SO-12-17-2.5)	1		
23	583-12288-00	CAM, decompression	1		
24	90508-12281	SPRING, torsion	1		
25	583-12283-00	BRACKET, decompression	1		
26	94701-00117	PLUG, spark (BP-7ES)	1		
27	583-11127-00	ABSORBER	2		

Fig. 2 CYLINDER

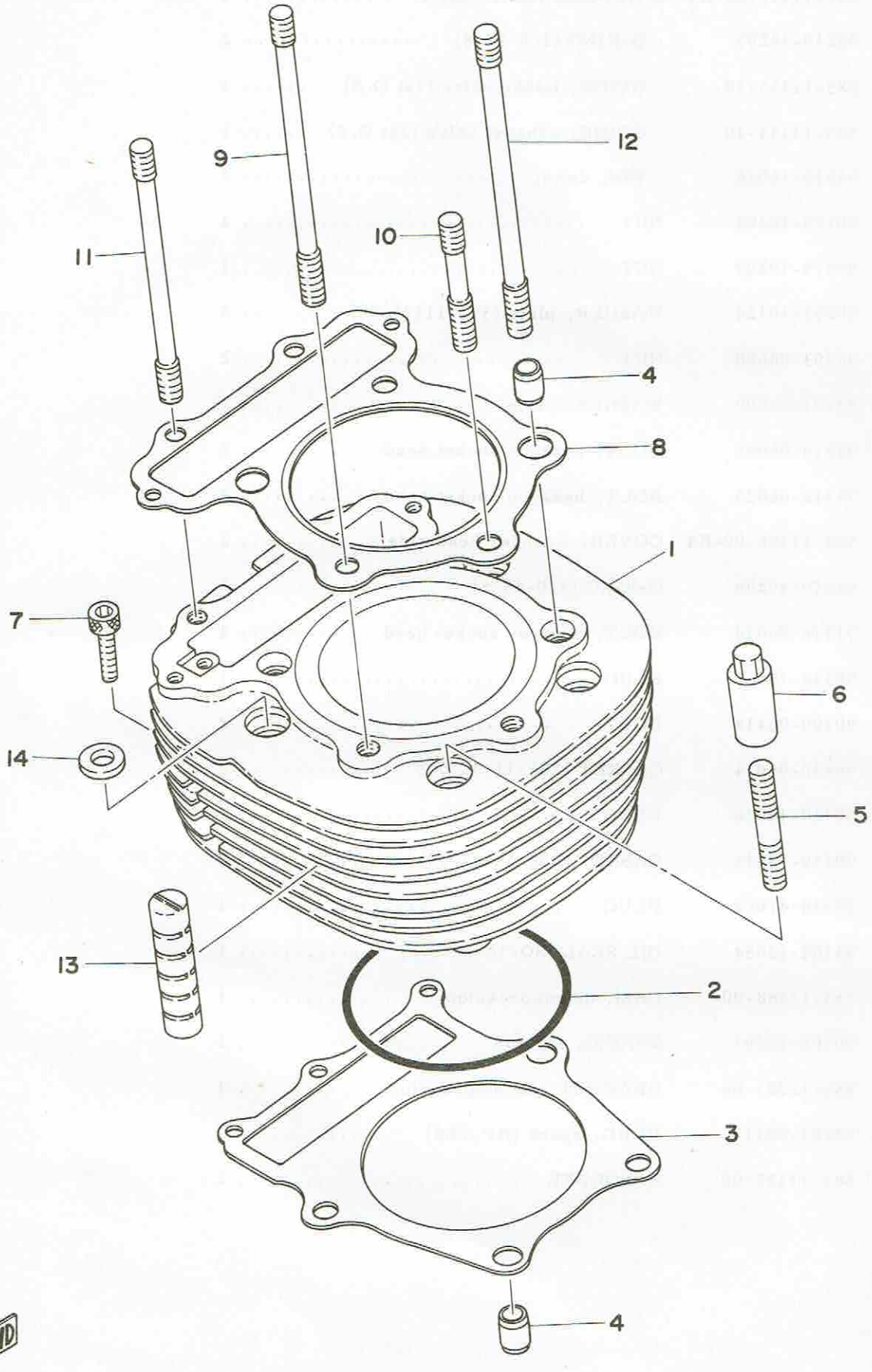

Ref. No.	Parts No.	Description	Q'ty	Applicable Machine No.	Remarks
2- 1	583-11311-00-R4	CYLINDER	1		
2	93210-92295	O-RING (3.1-92)	1		
3	583-11351-00	GASKET, cylinder	1		
4	91810-16016	PIN, dowel	4		
5	90116-10087	BOLT, stud (363-11361-00)	4		M10-64ℓ
6	90179-10201	NUT	4		
7	91316-06030	BOLT, hexagon socket head	3		
8	583-11181-00	GASKET, cylinder head	1		
9	90116-10222	BOLT, stud	2		M10-163ℓ
10	90116-10223	BOLT, stud	1		M10-68ℓ
11	90116-08190	BOLT, stud	2		M8-143ℓ
12	90116-10225	BOLT, stud	2		M10-173ℓ
13	583-11127-00	ABSORBER	2		
14	90201-10590	WASHER, plate	4		

Fig. 3 CRANK · PISTON

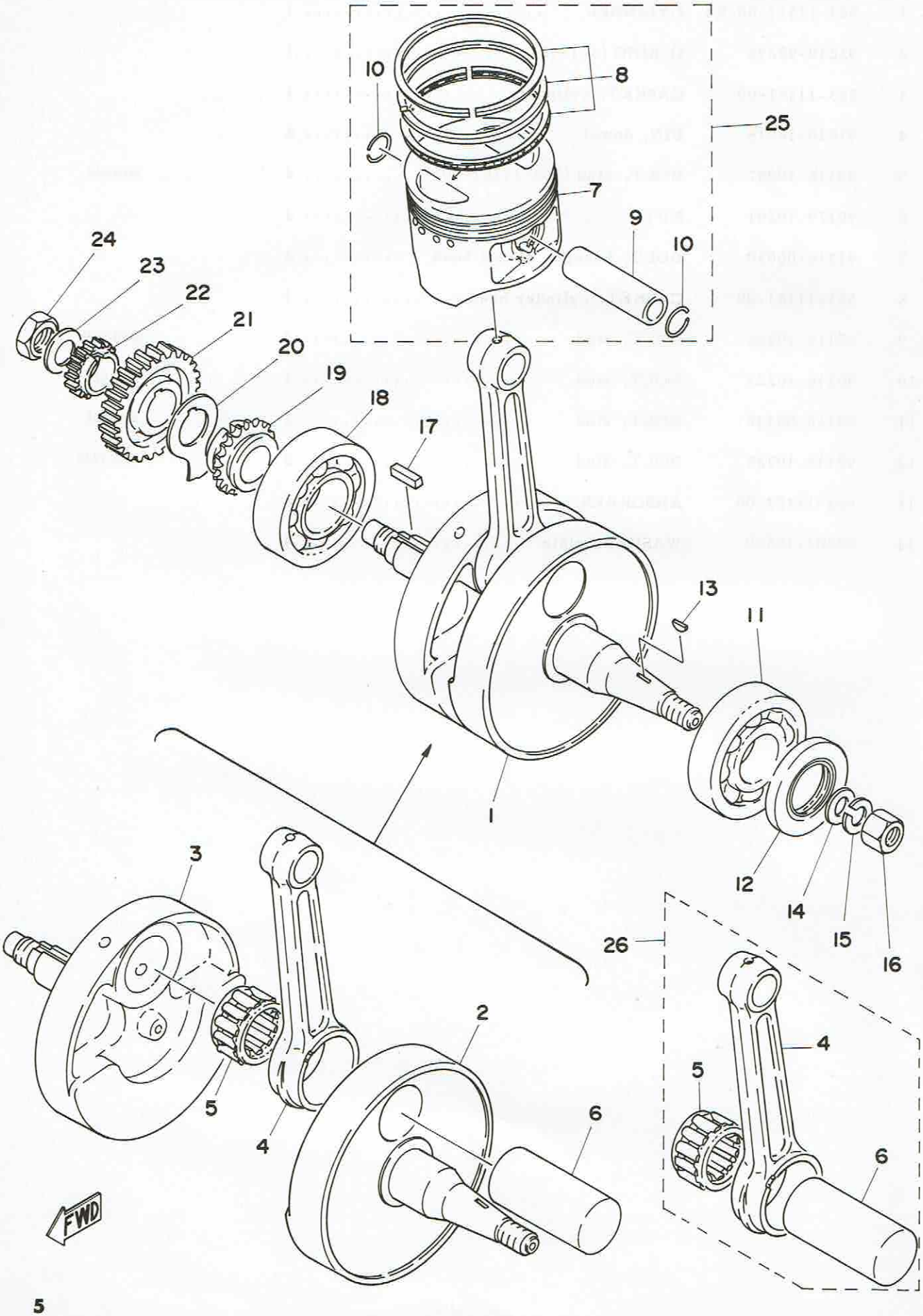

Ref. No.	Parts No.	Description	Q'ty	Applicable Machine No.	Remarks
3- 1	583-11400-00	CRANK ASS'Y	1		
2	583-11412-00	. CRANK 1	1		
3	583-11422-00	. CRANK 2	1		
4	583-11651-00	. ROD, connecting	1		
5	93310-635A5	. BEARING	1		
6	583-11681-00	. PIN, crank	1		
7	583-11631-01-95	PISTON (86.95mm STD)	U.R 1		
	583-11631-01-96	PISTON (86.96mm STD)			
	583-11635-01	PISTON (87.25mm 1st O.S)	1		Alternate Parts
	583-11636-01	PISTON (87.50mm 2nd O.S)	1		Alternate Parts
	583-11637-01	PISTON (87.75mm 3rd O.S)	1		Alternate Parts
	583-11638-01	PISTON (88.00mm 4th O.S)	1		Alternate Parts
8	583-11610-00	PISTON RING SET (STD)	1s		
	583-11610-10	PISTON RING SET (1st O.S)	1s		Alternate Parts
	583-11610-20	PISTON RING SET (2nd O.S)	1s		Alternate Parts
	583-11610-30	PISTON RING SET (3rd O.S)	1s		Alternate Parts
	583-11610-40	PISTON RING SET (4th O.S)	1s		Alternate Parts
9	583-11633-00	PIN, piston	1		
10	93450-22027	CLIP, piston pin (341-11634-00)	2		
11	93306-30616	BEARING (B6306)	1		
12	93102-30145	OIL SEAL (SD-30-60-6)	1		
13	90280-05013	KEY, woodruff	1		
14	90201-12593	WASHER, plate	1		
15	92901-12100	WASHER, spring	1		
16	90170-12067	NUT (214-11555-01)	1		
17	90282-07021	KEY, straight	1		
18	93306-30702	BEARING (B6307)	1		
19	583-11549-00	SPROCKET, cam chain drive (17T)	1		
20	583-11533-00	PLATE, cam chain sprocket	1		
21	583-16111-00	GEAR, primary drive (30T)	1		
22	583-11536-00	GEAR, breaker shaft drive (21T)	1		
23	90208-16019	WASHER	1		

Fig. 3 CRANK · PISTON

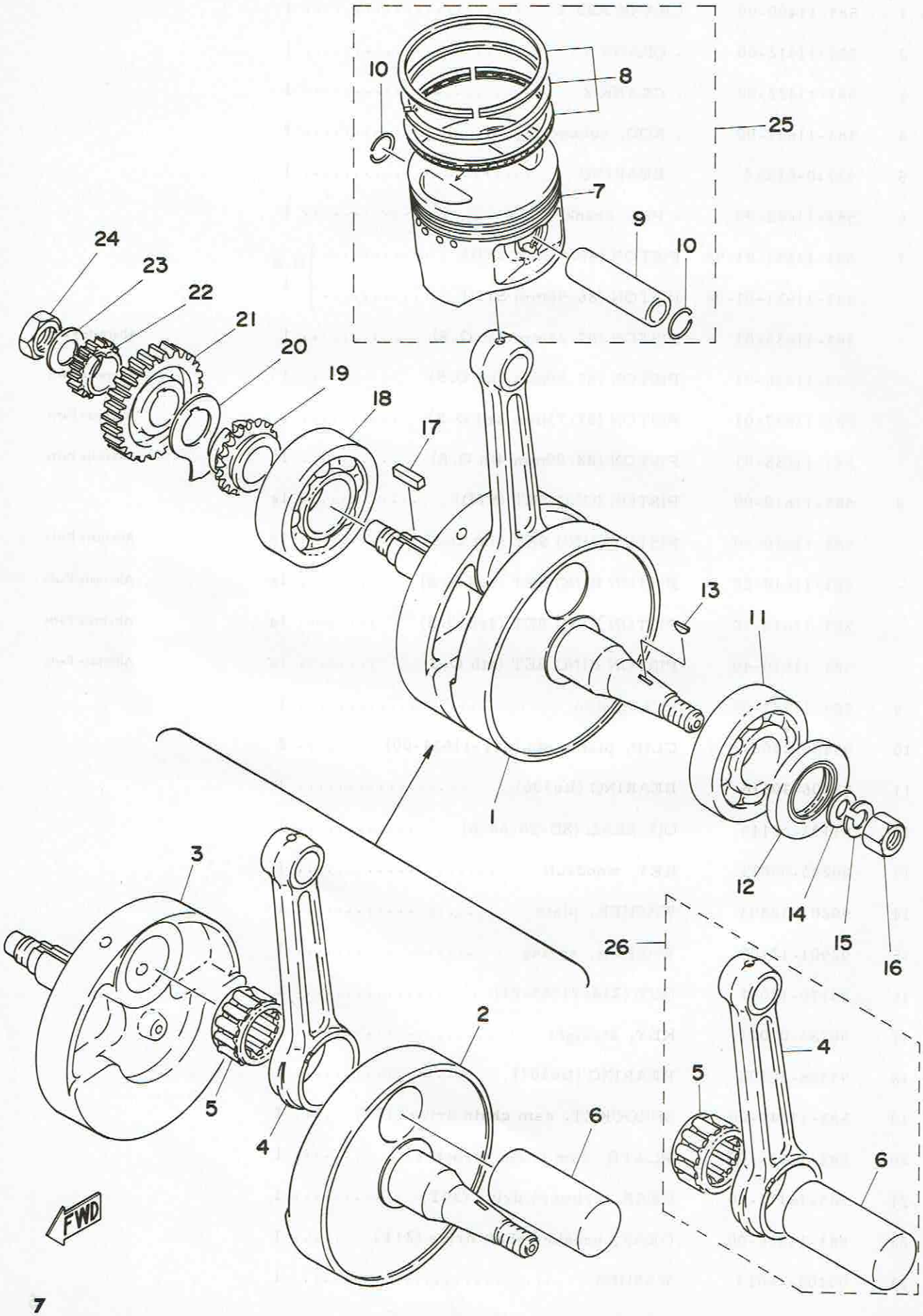

Ref. No.	Parts No.	Description	Q'ty	Applicable Machine No.	Remarks
3-24	90170-16182	NUT	1		

ALTERNATE PARTS

25	583-11630-00	PISTON ASS'Y (STD)	1s		Ref. No. 7,8,9,10
	583-11630-10	PISTON ASS'Y (1st O.S)	1s		
	583-11630-20	PISTON ASS'Y (2nd O.S)	1s		
	583-11630-30	PISTON ASS'Y (3rd O.S)	1s		
	583-11630-40	PISTON ASS'Y (4th O.S)	1s		
26	583-11650-00	CONNECTING ROD ASS'Y	1s		Ref. No. 4,5,6

Fig. 4 VALVE ROCKER ARM

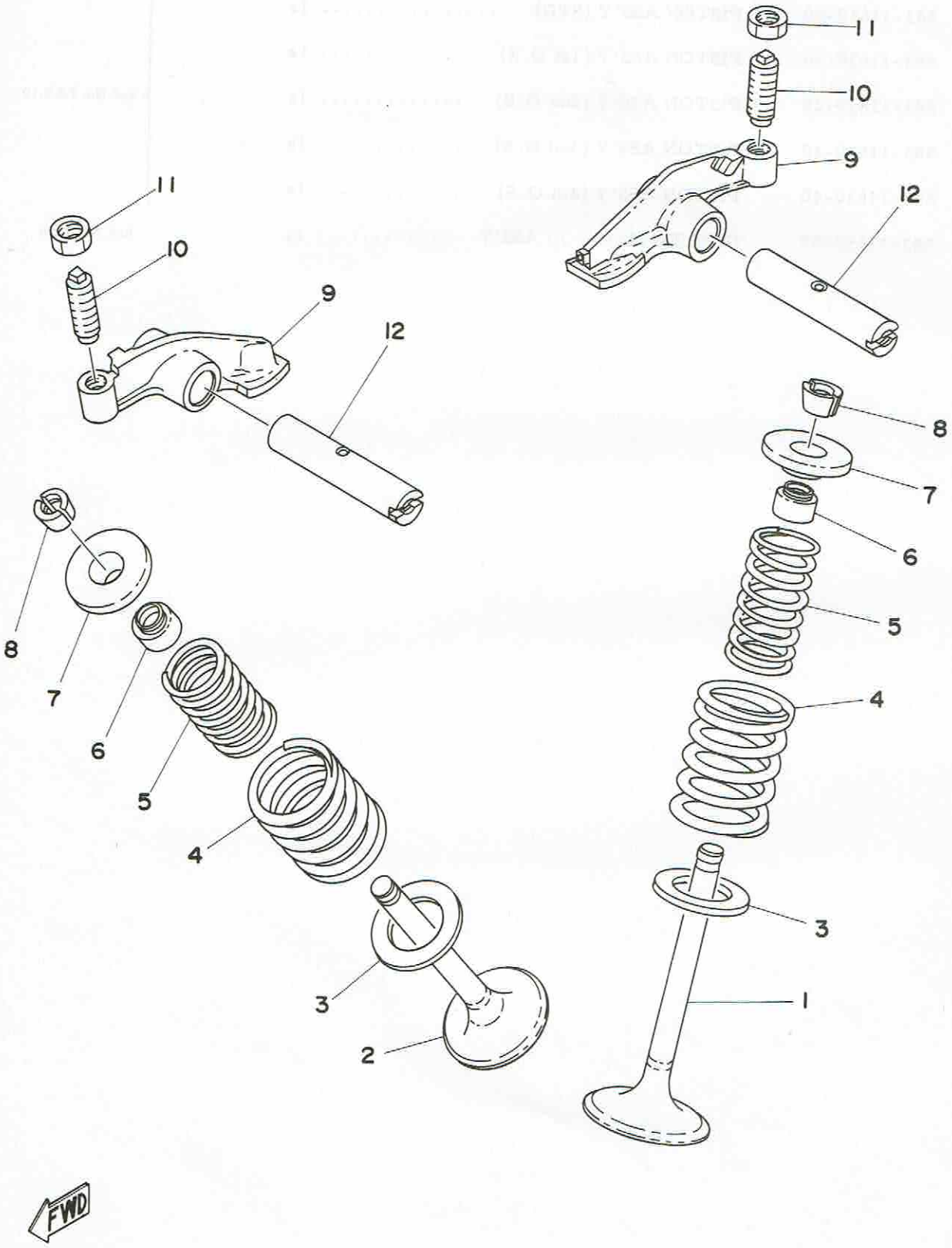

Ref. No.	Parts No.	Description	Q'ty	Applicable Machine No.	Remarks
4- 1	583-12111-00	VALVE, intake	1		
2	583-12121-00	VALVE, exhaust	1		
3	256-12116-01	SEAT, valve spring	2		
4	90501-42377	SPRING, outer	2		
5	90501-29376	SPRING, inner	2		
6	341-12119-02	SEAL, valve stem oil	2		
7	256-12117-00	RETAINER, valve spring	2		
8	341-12118-00	LOCK, valve spring retainer	4		
9	583-12151-00	ARM, valve rocker	2		
10	90149-08098	SCREW (447-12159-01)	2		
11	90170-08173	NUT	2		
12	583-12156-00	SHAFT, rocker	2		

Fig. 5 CAMSHAFT · CHAIN TENSIONER

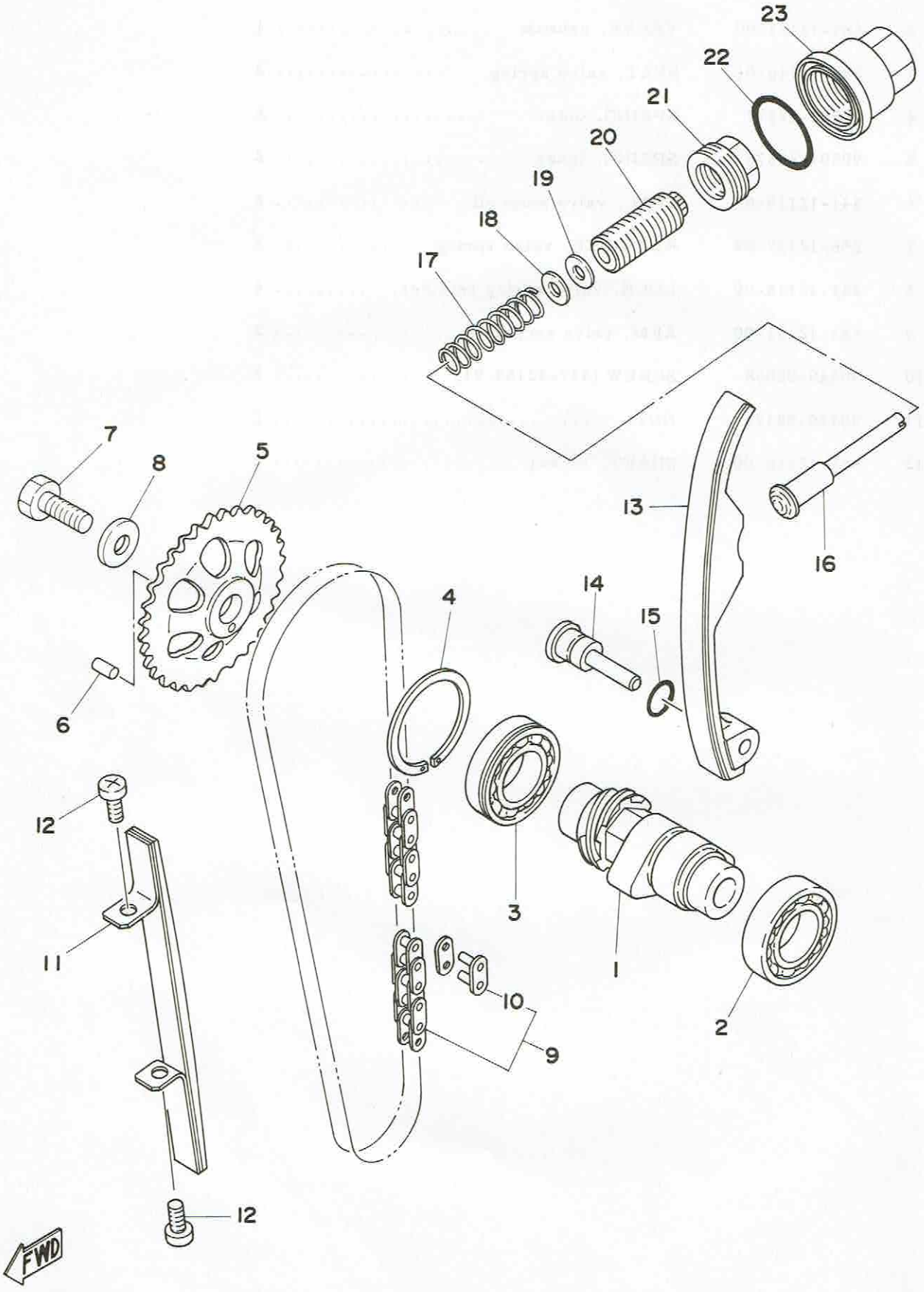

Ref. No.	Parts No.	Description	Q'ty	Applicable Machine No.	Remarks
5- 1	583-12171-01	SHAFT, cam	1		
2	93306-00502	BEARING (B6005)	1		
3	93306-00506	BEARING (B6005)	1		
4	93440-47044	CIRCLIP	1		
5	583-12176-00	SPROCKET, cam chain driven (34T)	1		
6	93604-10011	PIN, dowel	1		
7	90101-10303	BOLT	1		
8	90201-10591	WASHER, plate	1		
9	94500-02106	CHAIN (DK002-106L)	1		
10	94600-02001	. JOINT, chain	1		
11	583-12231-00	GUIDE, stopper 1	1		
12	92501-06015	SCREW, panhead	2		
13	341-12241-03	GUIDE, stopper 2	1		
14	583-12247-00	SHAFT, chain tensioner	1		
15	93210-12152	O-RING (1.8-11.5)	1		
16	583-12217-00	ROD, chain tensioner	1		
17	90501-14095	SPRING (341-12216-02)	1		
18	90201-06589	WASHER, plate	1		
19	583-12232-00	DAMPER	1		
20	90149-18100	SCREW	1		
21	90179-18199	NUT	1		
22	93210-32172	O-RING (2.4-31.5)	1		
23	583-12212-00	CAP, chain tensioner	1		

Fig. 6 CRANKCASE

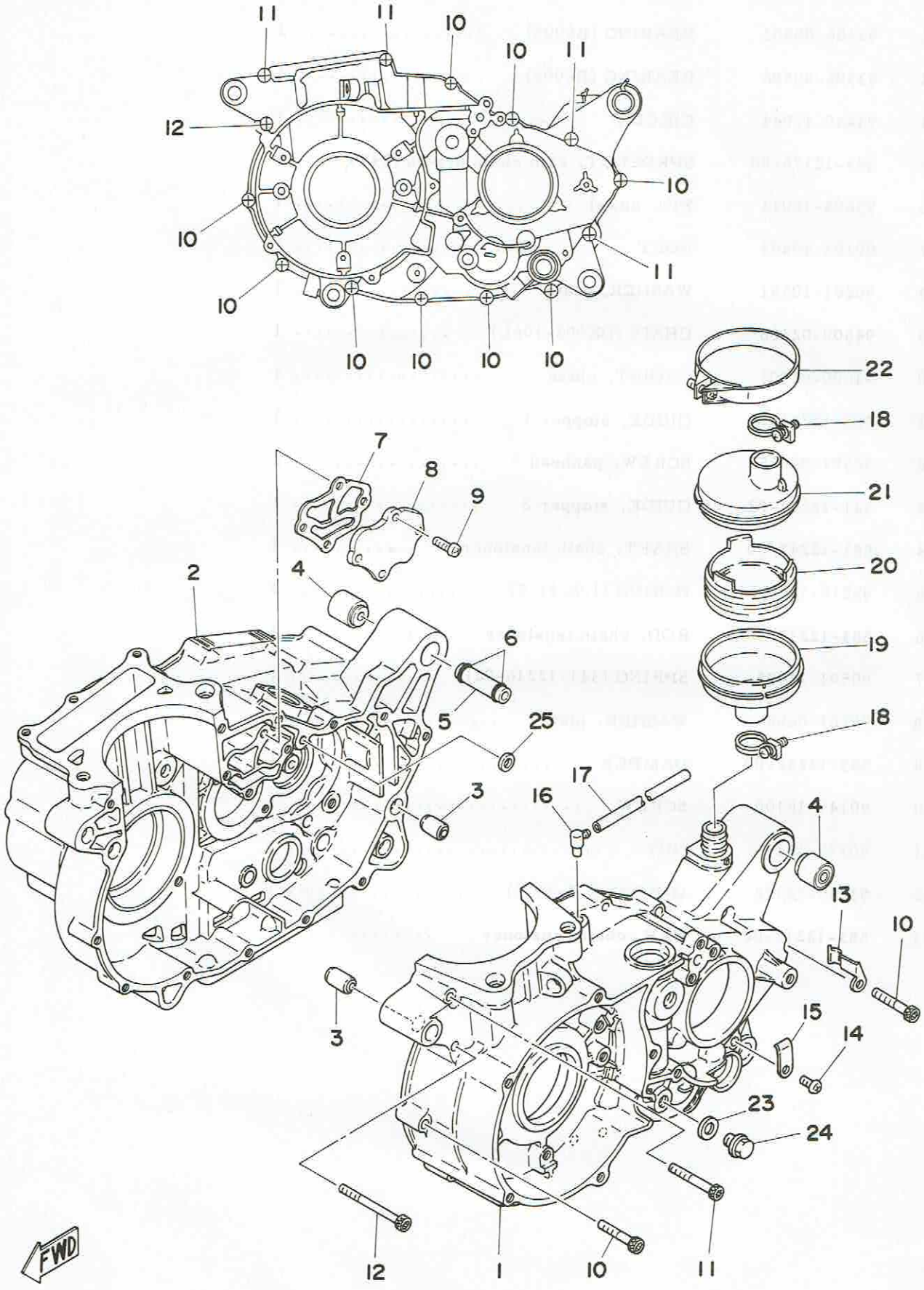

Ref. No.	Parts No.	Description	Q'ty	Applicable Machine No.	Remarks
6- 1	583-15111-00	CASE, crank left	1		
2	583-15121-00	CASE, crank right	1		
3	91810-05016	PIN, dowel	2		
4	583-15316-00	DAMPER, engine mount	2		
5	583-15317-01	SPACER, engine mount	1		
6	93210-12095	O-RING (1.3-12.0)	2		
7	583-15466-00	GASKET	1		
8	583-15426-00	COVER	1		
9	92501-06018	SCREW, panhead	4		
10	91316-06035	BOLT, hexagon socket head	9		
11	91316-06045	BOLT, hexagon socket head	4		
12	91316-06060	BOLT, hexagon socket head	1		
13	90465-05084	CLAMP	1		
14	92501-06012	SCREW, panhead	1		
15	90465-05075	CLAMP	1		
16	583-15371-00	BREATHER	1		
17	90445-07039	HOSE (296-24317-00 4.2-435)	1		
18	90460-22083	CLAMP	2		
19	583-15347-00	BREATHER 2	1		
20	583-15358-00	SEPARATER, oil	1		
21	583-15346-00	BREATHER 1	1		
22	90460-71017	CLAMP, hose (363-14455-00)	1		
23	90430-10031	GASKET (367-18568-00)	1		
24	90340-10003	PLUG (367-18588-00)	1		
25	90430-09121	GASKET	1		

Fig. 7 CRANKCASE COVER

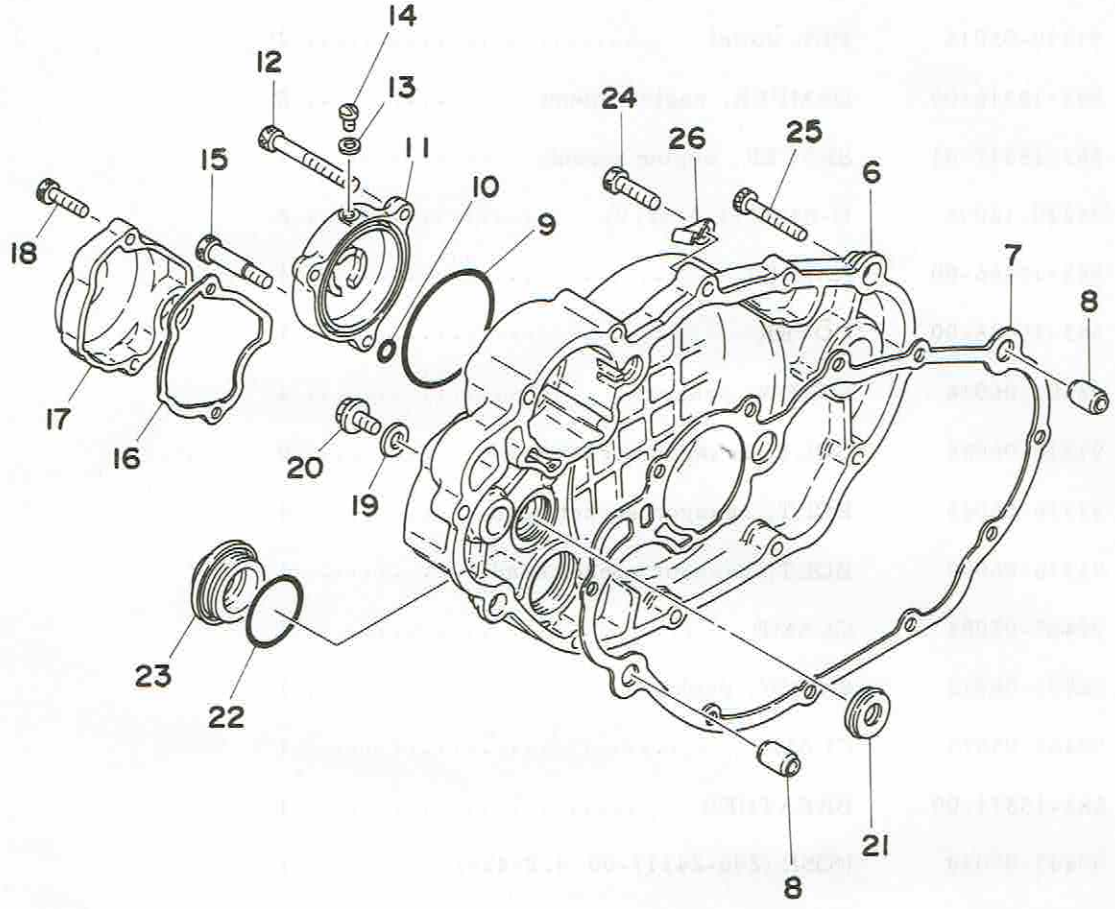

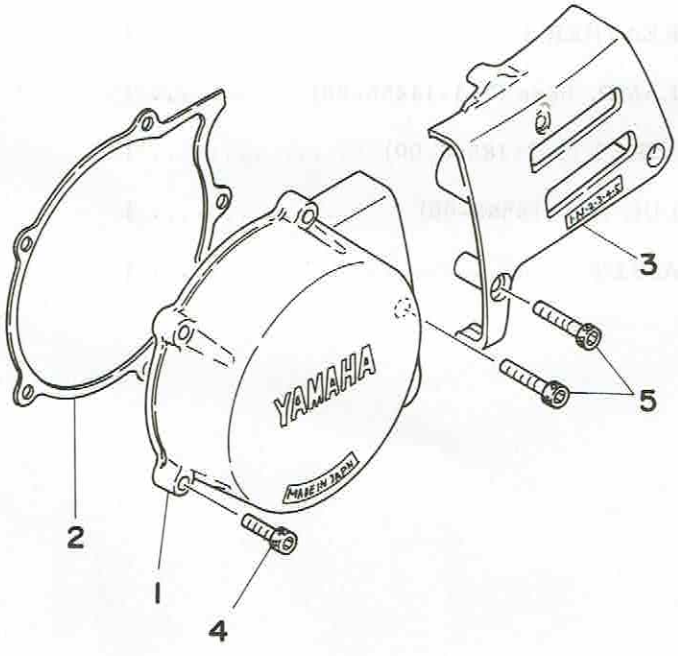

FWD

Ref. No.	Parts No.	Description	Q'ty	Applicable Machine No.	Remarks
7- 1	583-15411-00	COVER, crankcase left 1	1		
2	583-15451-00	GASKET, crankcase cover left	1		
3	583-15421-00	COVER, crankcase left 2	1		
4	91316-06025	BOLT, hexagon socket head	4		
5	91316-06035	BOLT, hexagon socket head	4		
6	583-15431-00	COVER, crankcase right	1		
7	583-15462-00	GASKET, crankcase cover right	1		
8	91810-05016	PIN, dowel	2		
9	93210-64297	O-RING (3.7-63.8)	1		
10	93210-07135	O-RING (2.4-6.9)	1		
11	583-13447-00	COVER, element	1		
12	91316-06060	BOLT, hexagon socket head	2		
13	90430-05126	GASKET	1		
14	98906-05008	SCREW, bind	1		
15	90109-06419	BOLT, hexagon socket head	1		
16	583-15457-00	GASKET, breaker cover	1		
17	583-15417-00	COVER, breaker	1		
18	91316-06025	BOLT	2		
19	90430-10027	GASKET (256-13168-00)	1		
20	90340-10003	PLUG, straight screw (367-18588-00)	1		
21	93101-14075	OIL SEAL (S-14-25-5.5)	1		
22	93210-35173	O-RING (3.0-34.5)	1		
23	583-15425-00	COVER	1		
24	91316-06030	BOLT, hexagon socket head	8		
25	91316-06040	BOLT, hexagon socket head	2		
26	90465-08076	CLAMP	1		

Fig. 8 OIL PUMP · OIL CLEANER

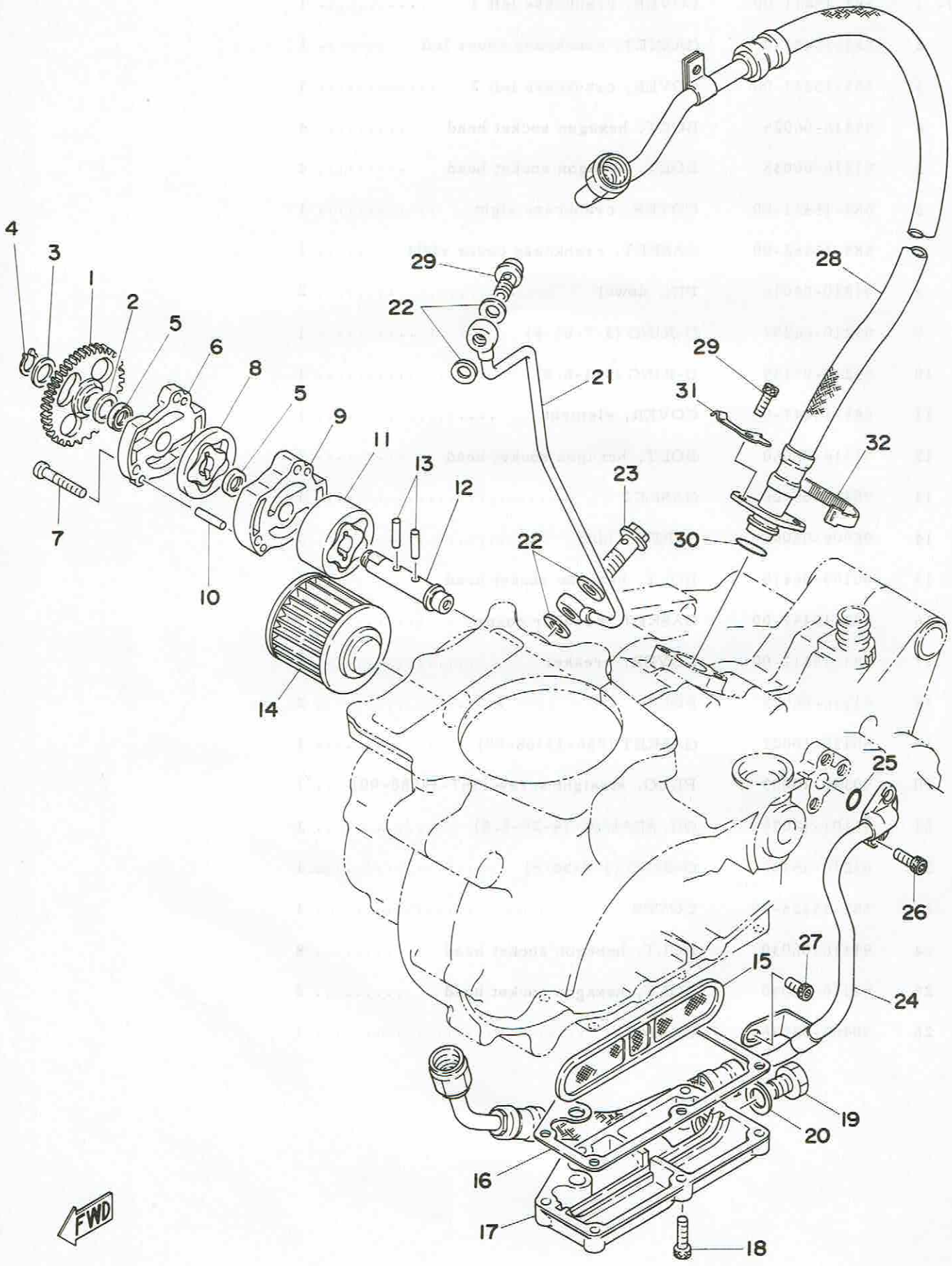

Ref. No.	Parts No.	Description	Q'ty	Applicable Machine No.	Remarks
8- 1	583-13325-00	GEAR, pump driven	1		
2	90201-12166	WASHER, plate (164-18572-00)	1		
3	90201-10119	WASHER, plate	1		
4	93410-10025	CIRCLIP (S-10)	1		
5	93104-11038	OIL SEAL (SD-11-15-3)	2		
6	583-13316-01	COVER, pump	1		
7	92501-06030	SCREW, panhead	3		
8	583-13310-01	ROTOR 1 ASS'Y	1		
9	583-13336-01	HOUSING, rotor	1		
10	93604-22050	PIN, dowel (4-21.8)	2		
11	583-13320-00	ROTOR 2 ASS'Y	1		
12	583-13314-00	SHAFT, pump	1		
13	93603-17070	PIN, dowel (3-16.8)	2		
14	583-13440-00	OIL CLEANER ASS'Y	1		
15	583-13411-00	STRAINER, oil	1		
16	583-13414-00	GASKET, strainer	1		
17	583-13417-00	COVER, strainer	1		
18	91316-06020	BOLT, hexagon socket head	6		
19	90101-14259	BOLT	1		
20	214-11198-01	GASKET	1		
21	583-13161-00	PIPE, delivery	1		
22	90430-08119	GASKET	4		
23	90401-08038	BOLT, union	2		
24	583-13464-00	HOSE, oil 1	1		
25	93210-10197	O-RING (1.9-9.8)	1		
26	91316-06015	BOLT, hexagon socket head	2		
27	91316-06012	BOLT, hexagon socket head	1		
28	583-13465-00	HOSE, oil 2	1		
29	91316-06015	BOLT, hexagon socket head	2		
30	93210-15171	O-RING (1.9-14.5)	1		
31	90465-06077	CLAMP	1		
32	437-83936-00	BAND	1		

Fig. 9 CONTACT BREAKER · GOVERNOR

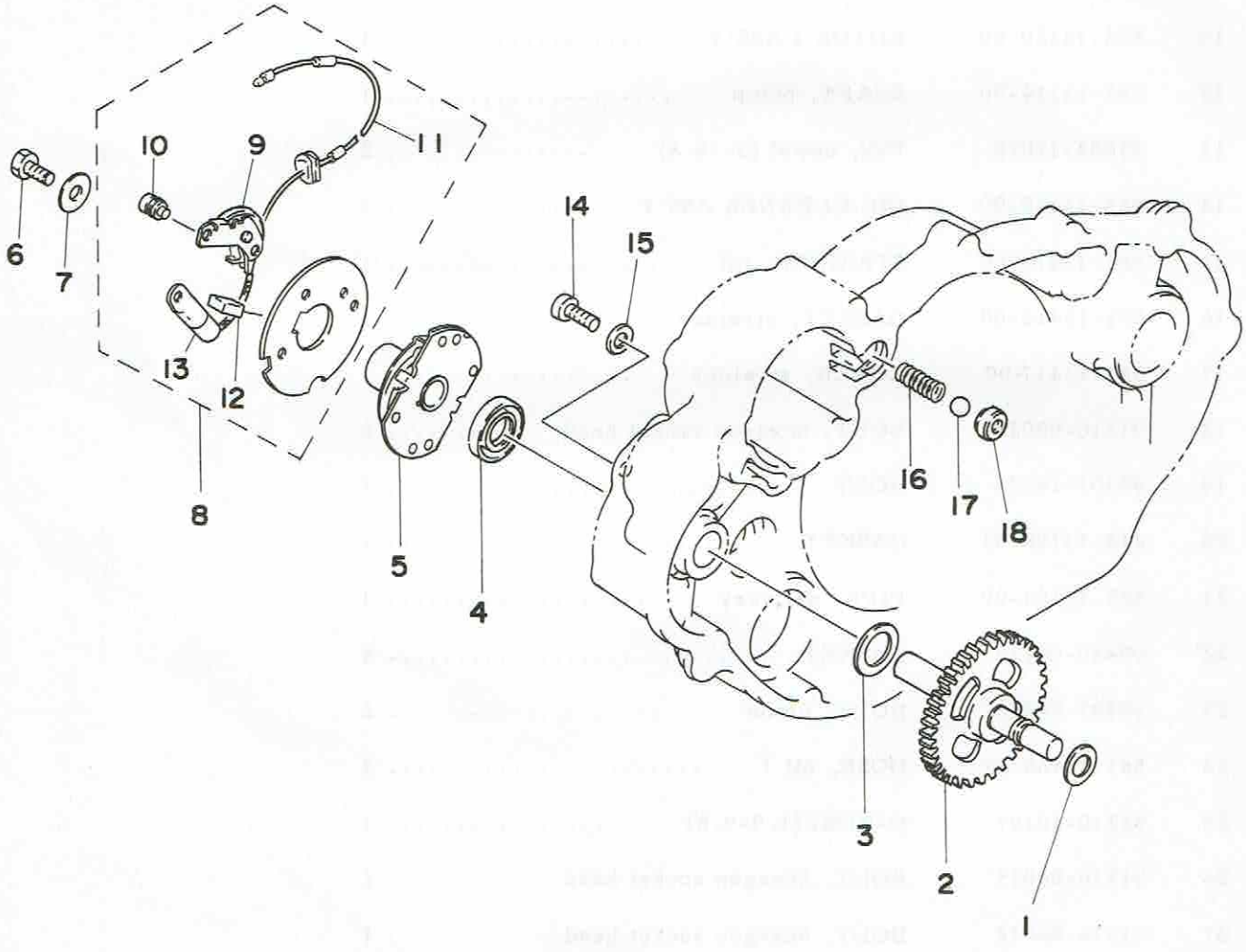

Ref. No.	Parts No.	Description	Q'ty	Applicable Machine No.	Remarks
9- 1	90201-09572	WASHER, plate	1		
2	583-11150-00	BREAKER SHAFT ASS'Y	1		
3	90201-15234	WASHER, plate (278-15613-00)	1		
4	93102-15147	OIL SEAL (SD-15-26-5)	1		
5	583-81653-50	GOVERNOR ASS'Y	1		
6	97301-06015	BOLT	1		
7	90201-06060	WASHER, plate (132-18338-00)	1		
8	583-81620-50	BREAKER PLATE ASS'Y	1		
9	583-81621-50	. CONTACT BREAKER ASS'Y	1		
10	583-81645-50	. SCREW, panhead (4-7)	3		
11	583-81615-50	. LEAD WIRE ASS'Y	1		
12	583-81631-50	. LUBRICATOR	1		
13	583-81625-50	. CONDENSER	1		
14	90147-06001	SCREW (256-11151-00)	2		
15	92901-06200	WASHER, plain	2		
16	90501-05378	SPRING, compression	1		
17	93503-08007	BALL	1		
18	583-13113-00	SEAL, check ball	1		

Fig. 10 CLUTCH

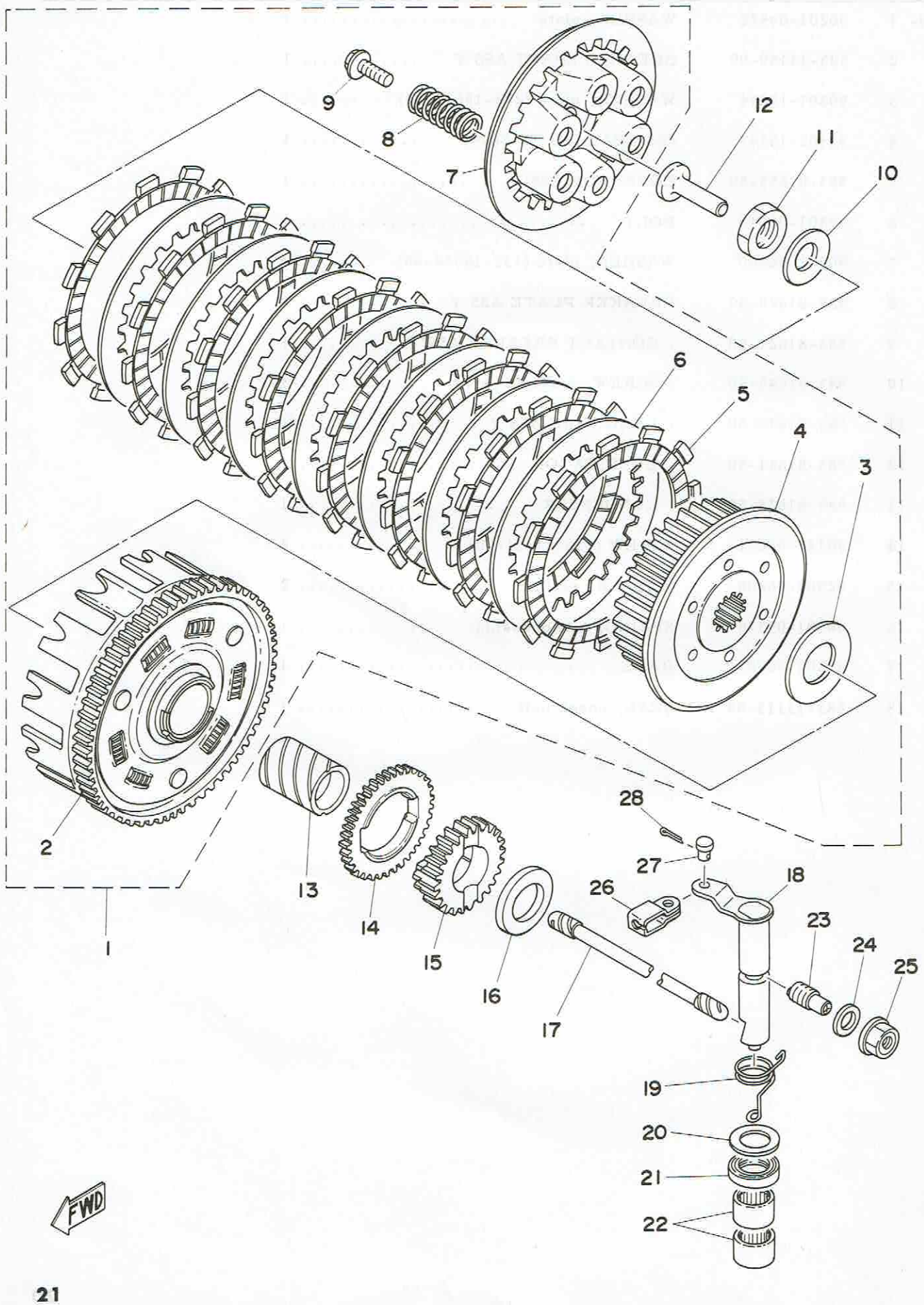

Ref. No.	Parts No.	Description	Q'ty	Applicable Machine No.	Remarks
10- 1	583-16301-00	CLUTCH ASS'Y	1		
2	583-16150-00	. PRIMARY DRIVEN GEAR COMP. (77T)	1		
3	170-16164-00	. PLATE, thrust 2	1		
4	583-16371-00	. BOSS, clutch	1		
5	583-16321-00	. PLATE, friction	8		
6	360-16325-00	. PLATE, clutch	7		
7	498-16351-00	. PLATE, pressure	1		
8	90501-23391	. SPRING, compression	6		
9	90159-06010	. SCREW, with washer	6		
10	214-16119-00	SPRING, belleville	1		
11	90170-18086	NUT (363-11555-00)	1		
12	174-16356-00	ROD, push 1	1		
13	90560-25153	SPACER	1		
14	583-13324-00	GEAR, pump drive (42T)	1		
15	583-15631-00	GEAR, kick pinion (19T)	1		
16	363-16154-00	PLATE, thrust 1	1		
17	583-16357-01	ROD, push	1		
18	583-16382-00	AXLE, push lever	1		
19	90508-12279	SPRING, torsion	1		
20	90201-17327	WASHER, plate	1		
21	93102-17148	OIL SEAL (SD-17-28-6)	1		
22	93315-11720	BEARING	2		
23	364-16343-00	SCREW, adjusting	1		
24	90201-12172	WASHER, plate (341-21757-00)	1		
25	583-16344-00	NUT, adjusting	1		
26	214-16389-00	JOINT	1		
27	90240-06005	PIN, with hole (214-16379-00)	1		
28	91401-10010	PIN, cotter	1		

Fig. 11 TRANSMISSION

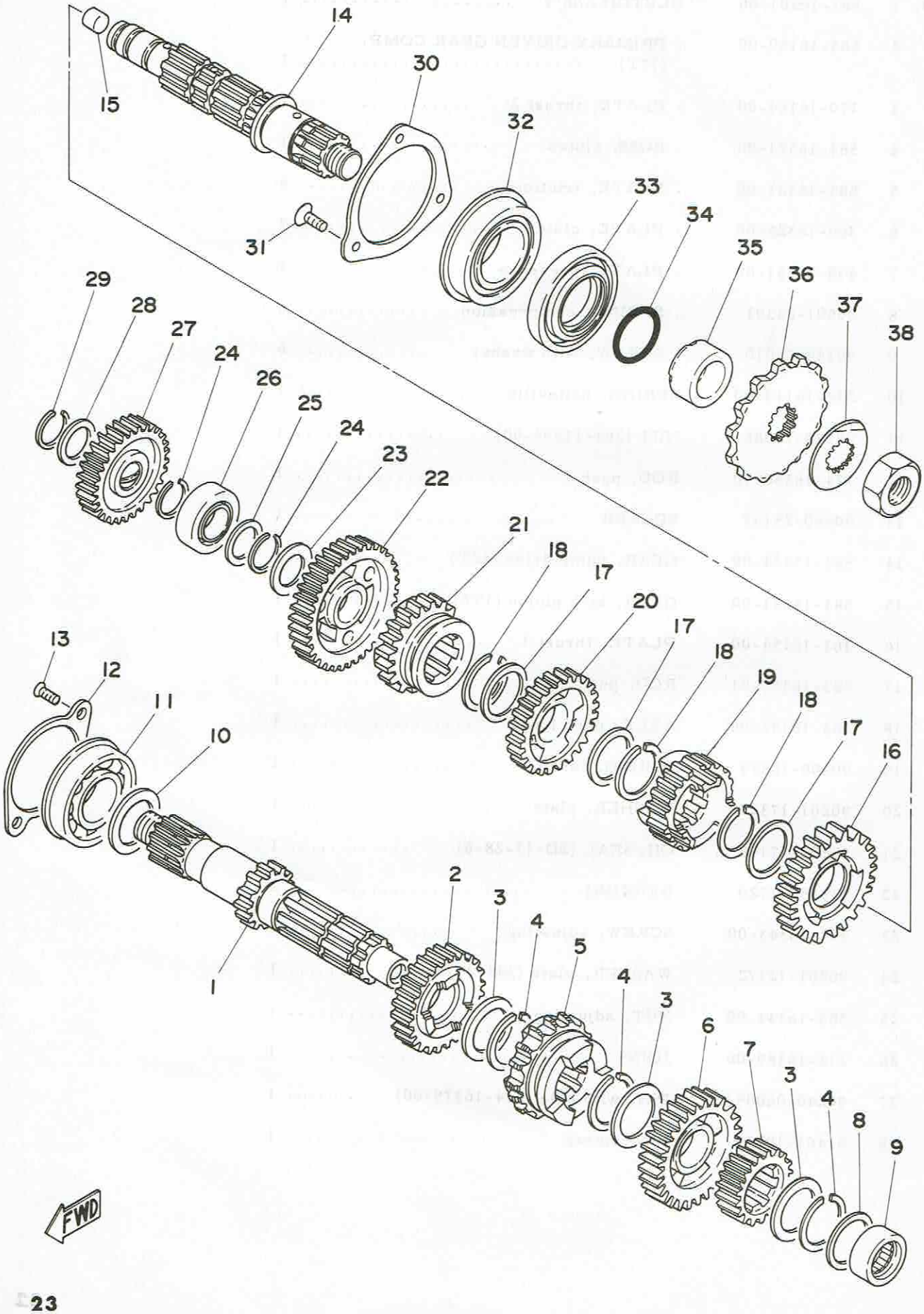

Ref. No.	Parts No.	Description	Q'ty	Applicable Machine No.	Remarks
11- 1	583-17411-01	AXLE, main (14T)	1		
2	583-17141-00	GEAR, 4th pinion (24T)	1		
3	90201-25287	WASHER, plate	3		
4	93440-25020	CIRCLIP (25ø special)	3		
5	583-17131-02	GEAR, 3rd pinion (21T)	1		
6	583-17151-01	GEAR, 5th pinion (27T)	1		
7	583-17121-00	GEAR, 2nd pinion (18T)	1		
8	90201-20266	WASHER, plate (132-17216-00)	1		
9	93311-42012	BEARING	1		
10	168-17428-01-05	SHIM, drive axle (25-34-0.5)	1		
11	93304-20501	BEARING (B4205)	1		
12	583-15383-00	PLATE, bearing cover	1		
13	92701-06015	SCREW, flathead	2		
14	583-17421-00	AXLE, drive	1		
15	90338-09066	PLUG	1		
16	583-17221-00	GEAR, 2nd wheel (28T)	1		
17	90201-25287	WASHER, plate	3		
18	93440-25020	CIRCLIP (25ø special)	3		
19	583-17251-01	GEAR, 5th wheel (21T)	1		
20	583-17231-01	GEAR, 3rd wheel (25T)	1		
21	583-17241-00	GEAR, 4th wheel (22T)	1		
22	583-17211-00	GEAR, 1st wheel (33T)	1		
23	90201-20278	WASHER, plate (168-17116-00)	1		
24	93410-20038	CIRCLIP (S-20)	2		
25	90201-20266	WASHER, plate (132-17216-00)	1		
26	93313-32008	BEARING	1		
27	583-15651-00	GEAR, kick idle (27T)	1		
28	90201-17255	WASHER, plate (156-17116-00)	1		
29	93410-17008	CIRCLIP (S-17)	1		
30	363-15381-00	PLATE, bearing cover	1		
31	98701-05012	SCREW, flathead	3		
32	93306-30517	BEARING (B6305)	1		

Fig. 11 TRANSMISSION

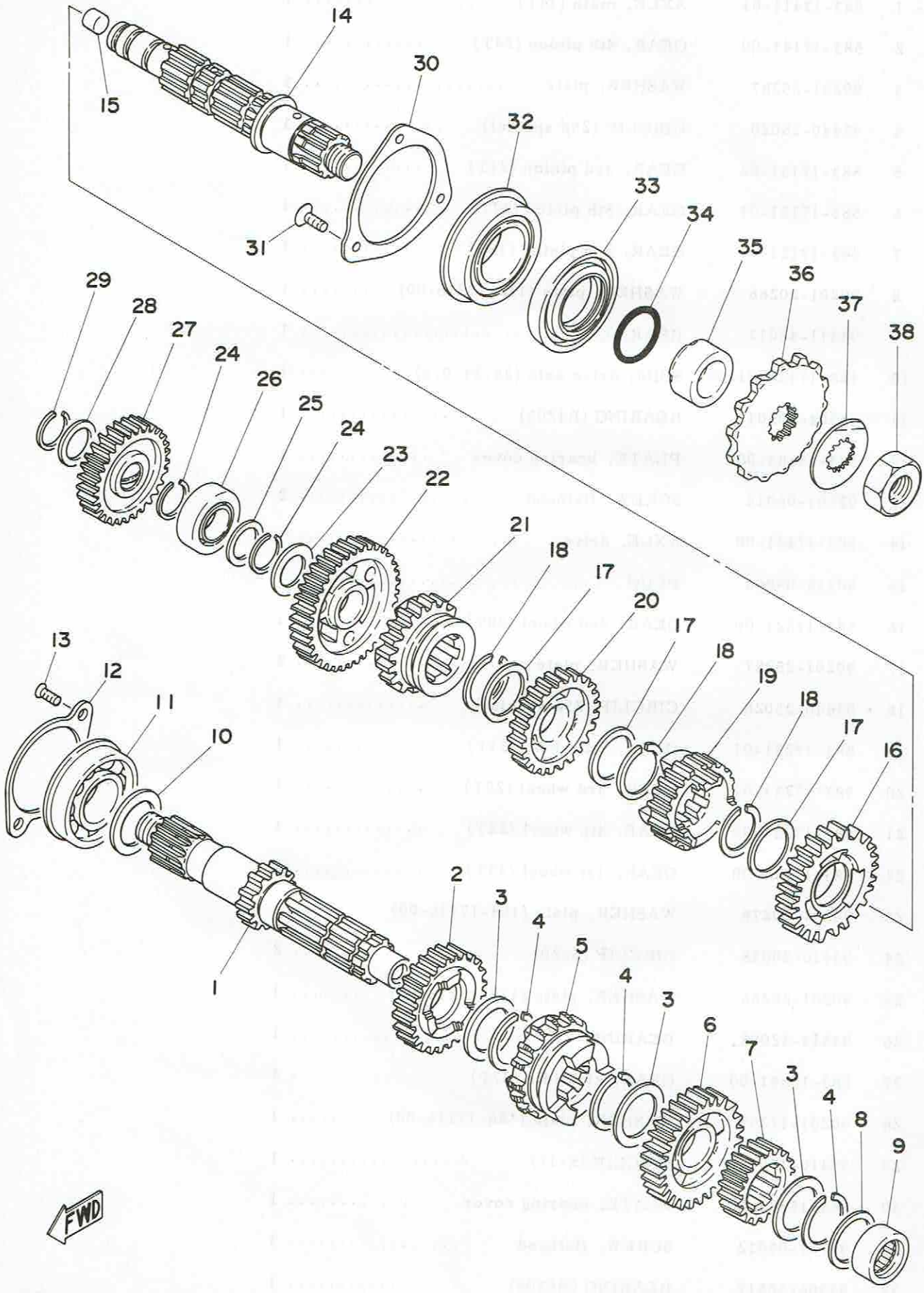

Ref. No.	Parts No.	Description	Q'ty	Applicable Machine No.	Remarks
11-33	93102-35146	OIL SEAL (SD-35-62-5.5)	1		
34	93210-22298	O-RING (1.9-21.7)	1		
35	90387-25507	COLLAR	1		
36	214-17461-40	SPROCKET, drive (14T)	U.R		STD
	214-17461-50	SPROCKET, drive (15T)	1		
	214-17461-60	SPROCKET, drive (16T)			
37	90215-21022	WASHER, lock (156-17464-01)	1		
38	90179-18020	NUT, lock (152-17463-00)	1		

Fig. 12 SHIFTER 1

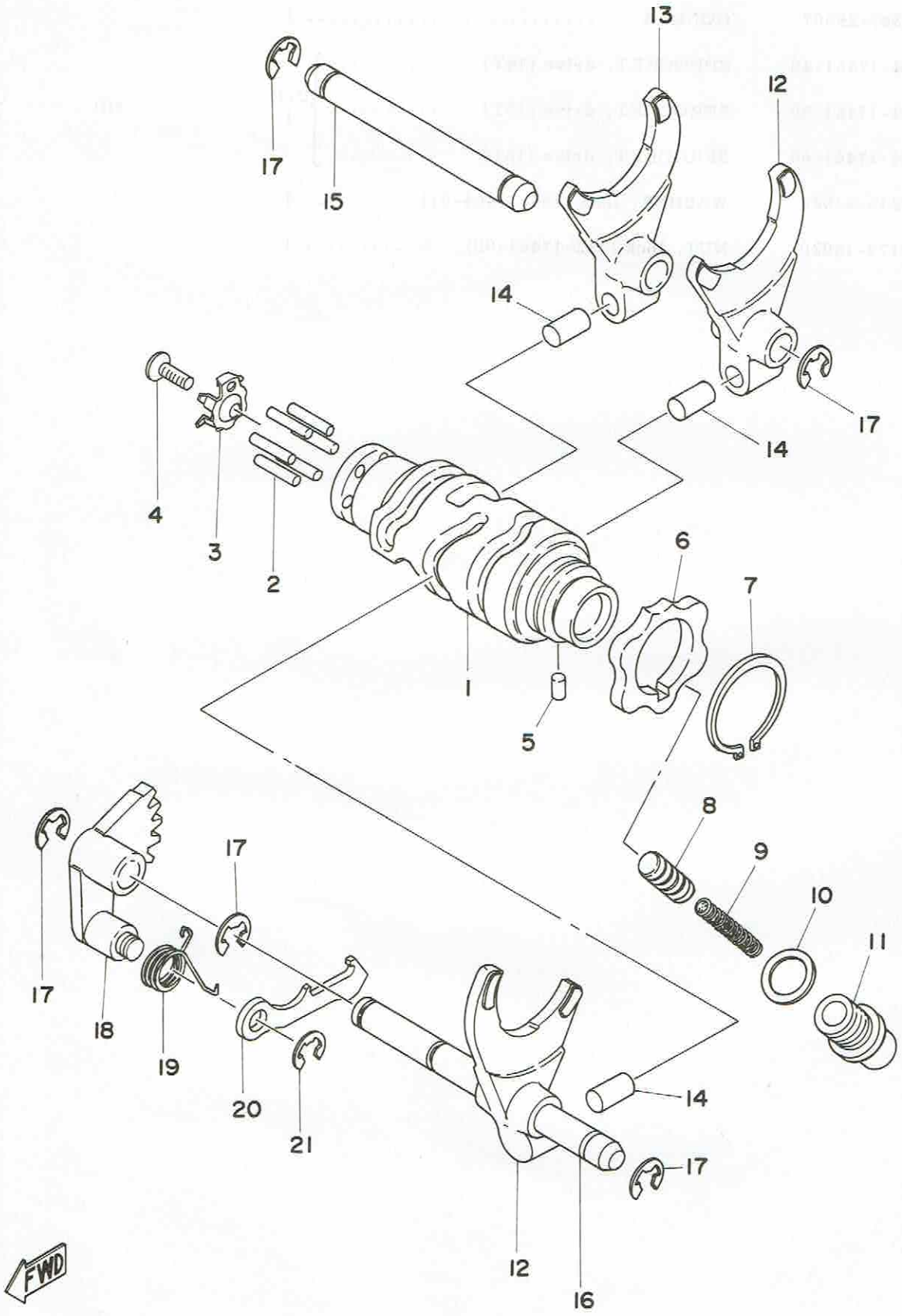

Ref. No.	Parts No.	Description	Q'ty	Applicable Machine No.	Remarks
12- 1	434-18541-03	CAM, shift	1		
2	93604-18100	PIN, dowel (4-18)	6		
3	434-18561-00	PLATE, side	1		
4	98701-05012	SCREW, flathead	1		
5	93604-08071	PIN, dowel (4-8)	1		
6	360-18141-01	PLATE, stopper	1		
7	93410-30012	CIRCLIP (S-30)	1		
8	278-18547-02	STOPPER, cam	1		
9	90501-10062	SPRING, compression (278-18557-00)	1		
10	137-15353-00	GASKET, drain plug	1		
11	90149-14031	SCREW (278-18577-03)	1		
12	364-18511-00	FORK, shift 1	2		
13	363-18511-00	FORK, shift 1	1		
14	90250-08017	PIN (278-18552-00)	3		
15	363-18535-00	BAR, shift fork guide 2	1		
16	363-18531-00	BAR, shift fork guide 1	1		
17	93430-08006	CIRCLIP (E-8)	5		
18	434-18122-00	LEVER, shift 2	1		
19	90508-08008	SPRING, torsion (363-18123-00)	1		
20	498-18151-02	LEVER, shift 3	1		
21	93430-07012	CIRCLIP (E-7)	1		

Fig.13 SHIFTER 2

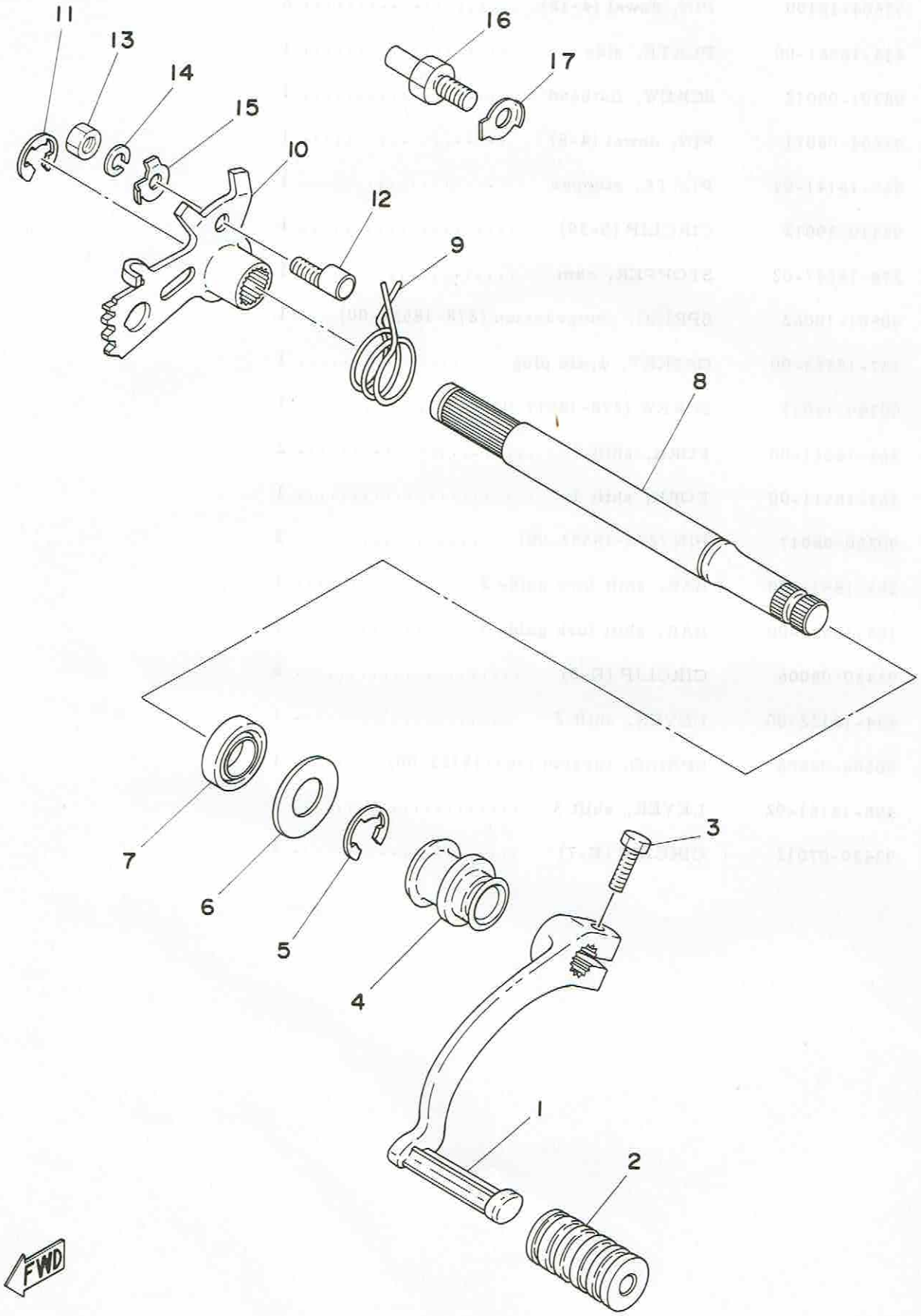

Ref. No.	Parts No.	Description	Q'ty	Applicable Machine No.	Remarks
13- 1	583-18111-00-93	PEDAL, shift	1		
2	132-18113-01	COVER, shift pedal	1		
3	91101-06020	BOLT	1		
4	583-18131-00	BOOT, sealing	1		
5	93430-12009	CIRCLIP (E-12)	1		
6	90201-14220	WASHER, plate (248-18137-00)	1		
7	93109-14010	OIL SEAL (SDO-14-24-6)	1		
8	583-18125-00	SHAFT, shift	1		
9	90508-32052	SPRING, torsion (214-18124-00)	1		
10	434-18121-00	LEVER, shift 1	1		
11	93430-10016	CIRCLIP (E-10)	1		
12	90149-06017	SCREW (214-18186-00)	1		
13	95301-06600	NUT	1		
14	92901-06100	WASHER, spring	1		
15	90215-06016	WASHER, lock	1		
16	278-18127-00	STOPPER, screw	1		
17	90215-08115	WASHER, lock	1		

Fig. 14 KICK STARTER

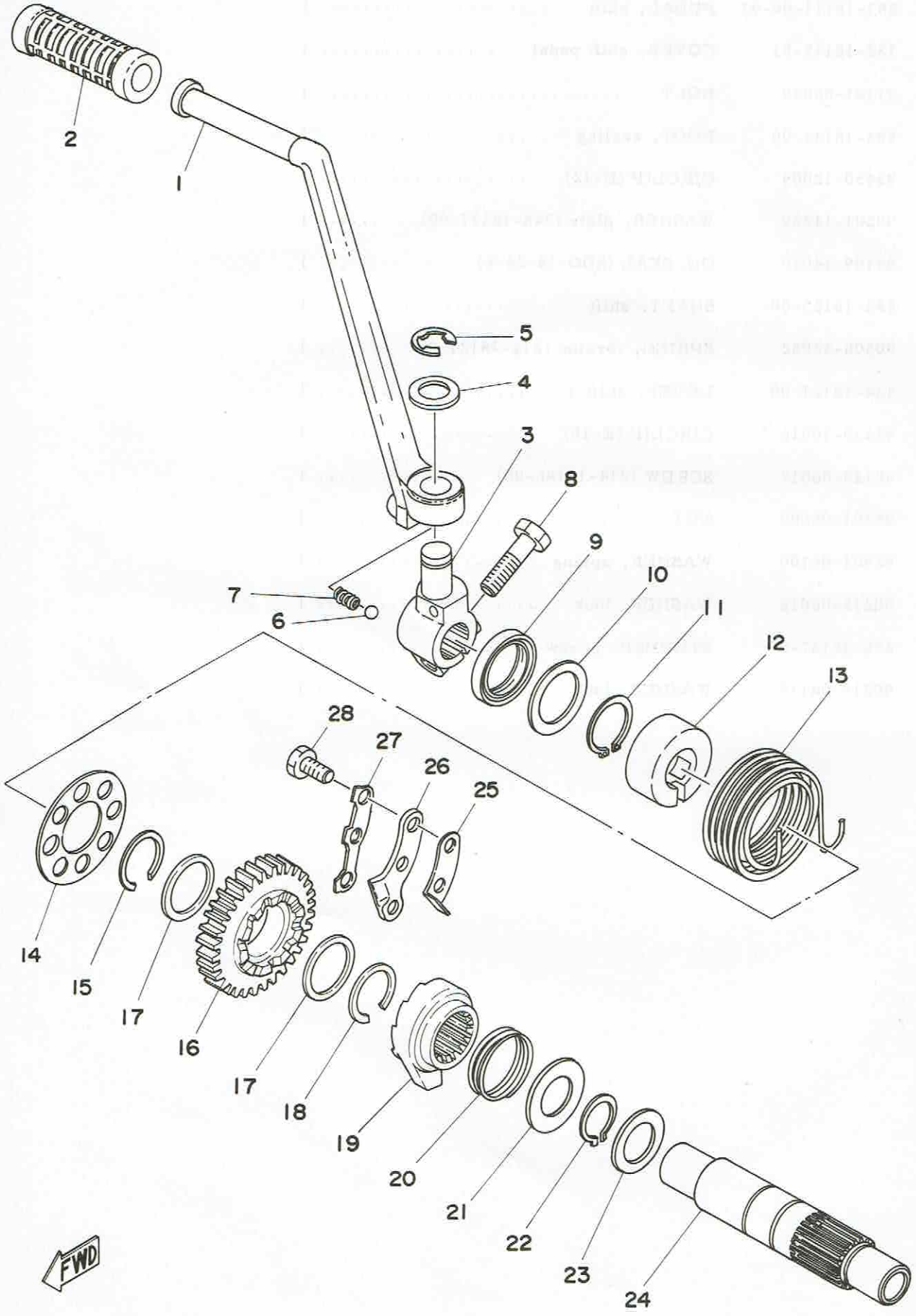

Ref. No.	Parts No.	Description	Q'ty	Applicable Machine No.	Remarks
14- 1	583-15611-00	CRANK, kick	1		
2	156-15618-01	COVER, kick lever	1		
3	583-15621-00	BOSS, kick crank	1		
4	90201-15234	WASHER, plate (278-15613-00)	1		
5	93430-10016	CIRCLIP (E-10)	1		
6	93507-32009	BALL (7/32 inch)	1		
7	90501-12081	SPRING, compression (278-15622-00)	1		
8	97321-08030	BOLT	1		
9	93102-25064	OIL SEAL (SD-25-35-7)	1		
10	90201-25290	WASHER, plate (131-15653-00)	1		
11	93410-25010	CIRCLIP (S-25)	1		
12	90560-25154	SPACER	1		
13	90508-32280	SPRING, torsion	1		
14	583-15676-00	COVER, kick spring	1		
15	93440-25019	CIRCLIP (25ø special)	1		
16	583-15641-00	GEAR, kick (29T)	1		
17	90201-25287	WASHER, plate	2		
18	93440-25020	CIRCLIP (25ø special)	1		
19	363-15671-01	WHEEL, ratchet	1		
20	90501-23143	SPRING, compression (363-15675-00)	1		
21	363-15676-00	COVER, spring	1		
22	93410-19015	CIRCLIP (S-19)	1		
23	90201-20278	WASHER, plate (168-17116-00)	1		
24	583-15661-00	AXLE, kick	1		
25	434-15668-00	STOPPER, kick spring	1		
26	363-15674-00	GUIDE, ratchet wheel	1		
27	363-15686-00	WASHER, lock	1		
28	97321-06015	BOLT	3		

Fig. 15 INTAKE

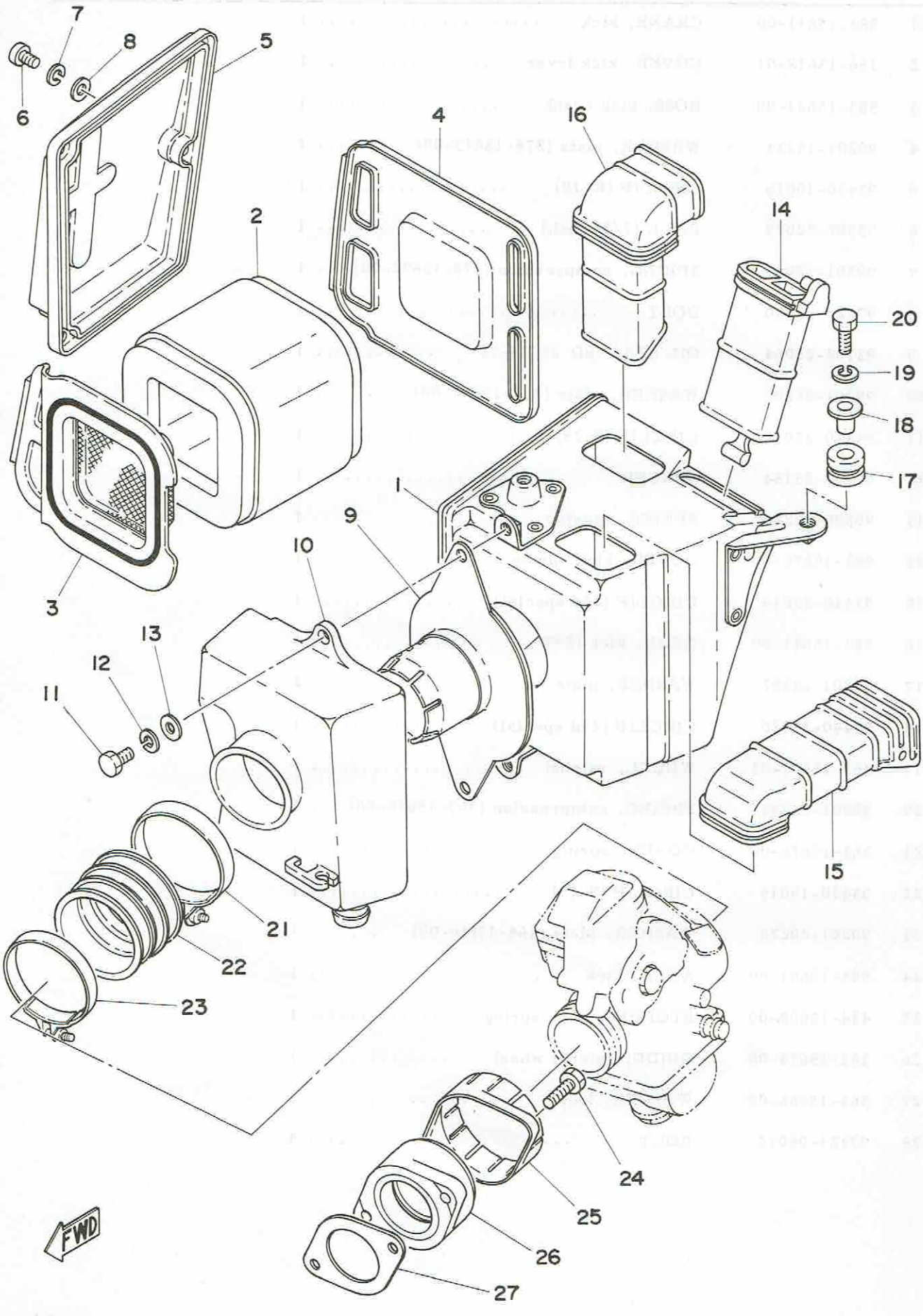

Ref. No.	Parts No.	Description	Q'ty	Applicable Machine No.	Remarks
15- 1	583-14411-01	CASE, air cleaner 1	1		
2	583-14451-00	ELEMENT, air cleaner	1		
3	583-14468-00	PLATE, element 1	1		
4	583-14472-00	PLATE, element 2	1		
5	583-14422-00	CAP, air cleaner case	1		
6	98501-05012	SCREW, panhead	3		
7	92901-05100	WASHER, spring	3		
8	92901-05200	WASHER, plain	3		
9	583-14485-00	JOINT, pipe	1		
10	583-14421-00	CASE, air cleaner 2	1		
11	97301-06015	BOLT, hexagon	2		
12	92901-06100	WASHER, spring	2		
13	92901-06600	WASHER, plate	2		
14	583-14437-00	DUCT 1	1		
15	583-14431-00	SILENCER 1	1		
16	583-14441-00	SILENCER 2	1		
17	90480-14102	GROMMET (214-21717-00)	2		
18	90387-07391	COLLAR (437-21633-00)	2		
19	92901-06100	WASHER, spring	2		
20	97301-06025	BOLT, hexagon	2		
21	90460-58015	CLAMP, hose (371-14456-00)	2		
22	583-14453-00	JOINT, air cleaner	1		
23	90460-61063	CLAMP, hose (256-14455-00)	1		
24	91316-06020	BOLT	2		
25	256-13564-00	COVER, joint	1		
26	583-13565-00	MANIFOLD, intake	1		
27	583-13556-00	GASKET, manifold	1		

Fig. 16 CARBURETOR

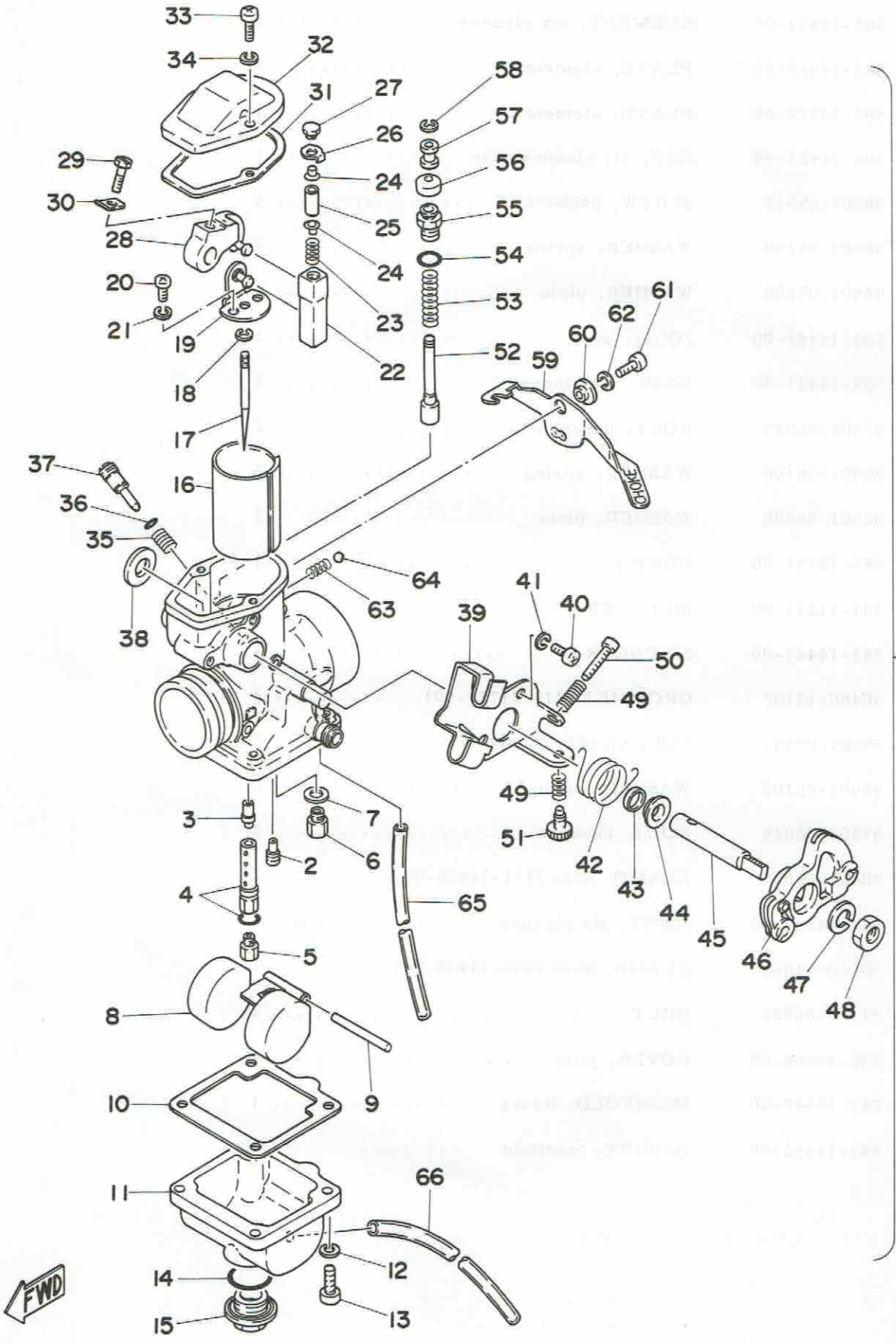

Ref. No.	Parts No.	Description	Q'ty	Applicable Machine No.	Remarks
16- 1	583-14101-60	CARBURETOR ASS'Y	1		
2	193-14142-35	. JET, pilot (#35)	1		
3	583-14141-52	. NOZZLE, main (Q-2)	1		
4	583-14148-00	. PIPE, needle jet with O-ring	1		
5	137-14143-40	. JET, main (#200)	U.R		STD
	137-14143-42	. JET, main (#210)	1		
	137-14143-44	. JET, main (#220)			
6	168-14190-25	. VALVE SEAT ASS'Y	1		
7	214-14195-00	. WASHER, valve seat	1		
8	583-14185-00	. FLOAT	1		
9	127-14186-00	. PIN, float	1		
10	583-14184-00	. GASKET, float chamber	1		
11	583-14181-00	. BODY, float chamber	1		
12	92501-06015	. SCREW, panhead	4		
13	92901-06100	. WASHER, spring	4		
14	558-14147-00	. O-RING	1		
15	500-14115-00	. PLUG, screw	1		
16	583-14112-45	. VALVE, throttle (C.A.-4.5)	1		
17	316-14116-10	. NEEDLE (5J10-3)	1		
18	164-14137-00	. CLIP, needle	1		
19	583-14291-00	. BRACKET, throttle valve	1		
20	98501-04012	. SCREW, panhead	2		
21	92901-04100	. WASHER, spring	2		
22	583-14274-00	. CONNECTOR	1		
23	583-14933-00	. SPRING	1		
24	583-14558-00	. PIN 2	2		
25	583-14386-00	. PIN 1	1		
26	583-14951-00	. WASHER	1		
27	583-14216-00	. BOLT, connector fitting	1		
28	583-14292-00	. LEVER, throttle valve	1		
29	583-14592-00	. BOLT, throttle valve	1		
30	583-14597-00	. WASHER, throttle lever	1		

Fig. 16 CARBURETOR

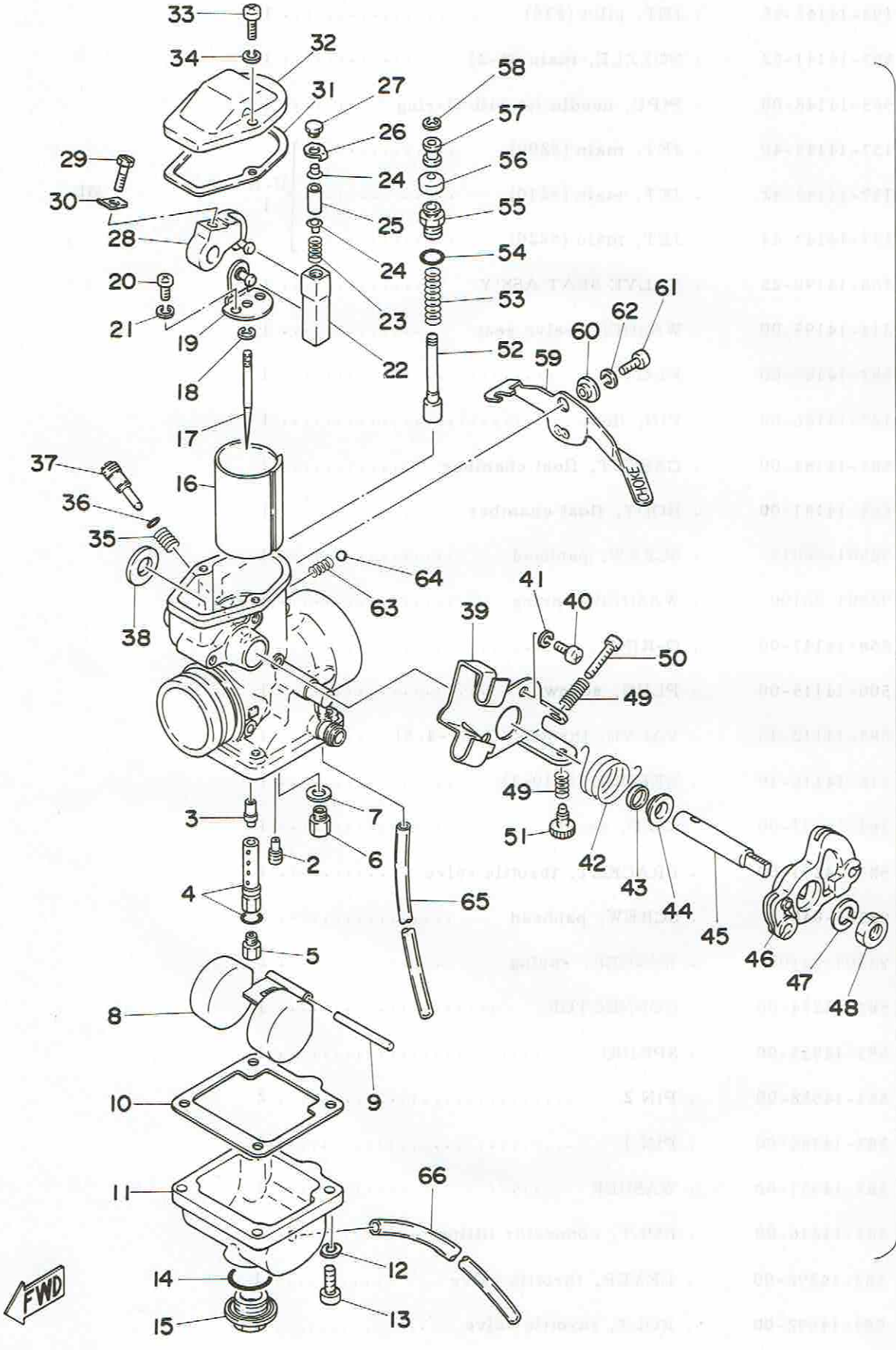

Ref. No.	Parts No.	Description	Q'ty	Applicable Machine No.	Remarks
16-31	583-14536-00	. GASKET	1		
32	583-14158-00	. TOP, mixing chamber	1		
33	98503-04015	. SCREW, panhead	2		
34	92901-04100	. WASHER, spring	2		
35	127-14134-00	. SPRING, air adjusting	1		
36	354-14147-00	. O-RING	1		
37	525-14123-00	. SCREW, air adjusting	1		
38	583-14264-00	. SPACER, throttle lever	1		
39	583-14571-00	. BRACKET	1		
40	98501-05012	. SCREW, panhead	2		
41	92901-05100	. WASHER, spring	2		
42	583-14131-00	. SPRING, throttle lever return	1		
43	583-14239-00	. SEAL, throttle lever shaft	1		
44	583-14265-00	. WASHER, throttle lever shaft	1		
45	583-14215-00	. SHAFT, throttle lever	1		
46	583-14573-00	. LEVER, throttle	1		
47	92901-08100	. WASHER, spring	1		
48	812-14594-00	. NUT, throttle lever	1		
49	583-14133-00	. SPRING, throttle stop	2		
50	583-14245-00	. SCREW	1		
51	583-14121-00	. SCREW, throttle stop	1		
52	583-14171-01	. PLUNGER, starter	1		
53	500-14135-00	. SPRING, plunger	1		
54	583-14562-00	. O-RING	1		
55	583-14174-00	. CAP, plunger	1		
56	802-14173-00	. COVER, plunger cap	1		
57	583-14918-00	. RING, plunger starter	1		
58	737-14137-00	. CLIP, plunger starter	1		
59	583-14175-01	. LEVER, starter	1		
60	583-14594-00	. COLLAR, starter lever	1		
61	92501-06012	. SCREW, panhead	1		
62	92901-06100	. WASHER, spring	1		

Fig. 16 CARBURETOR

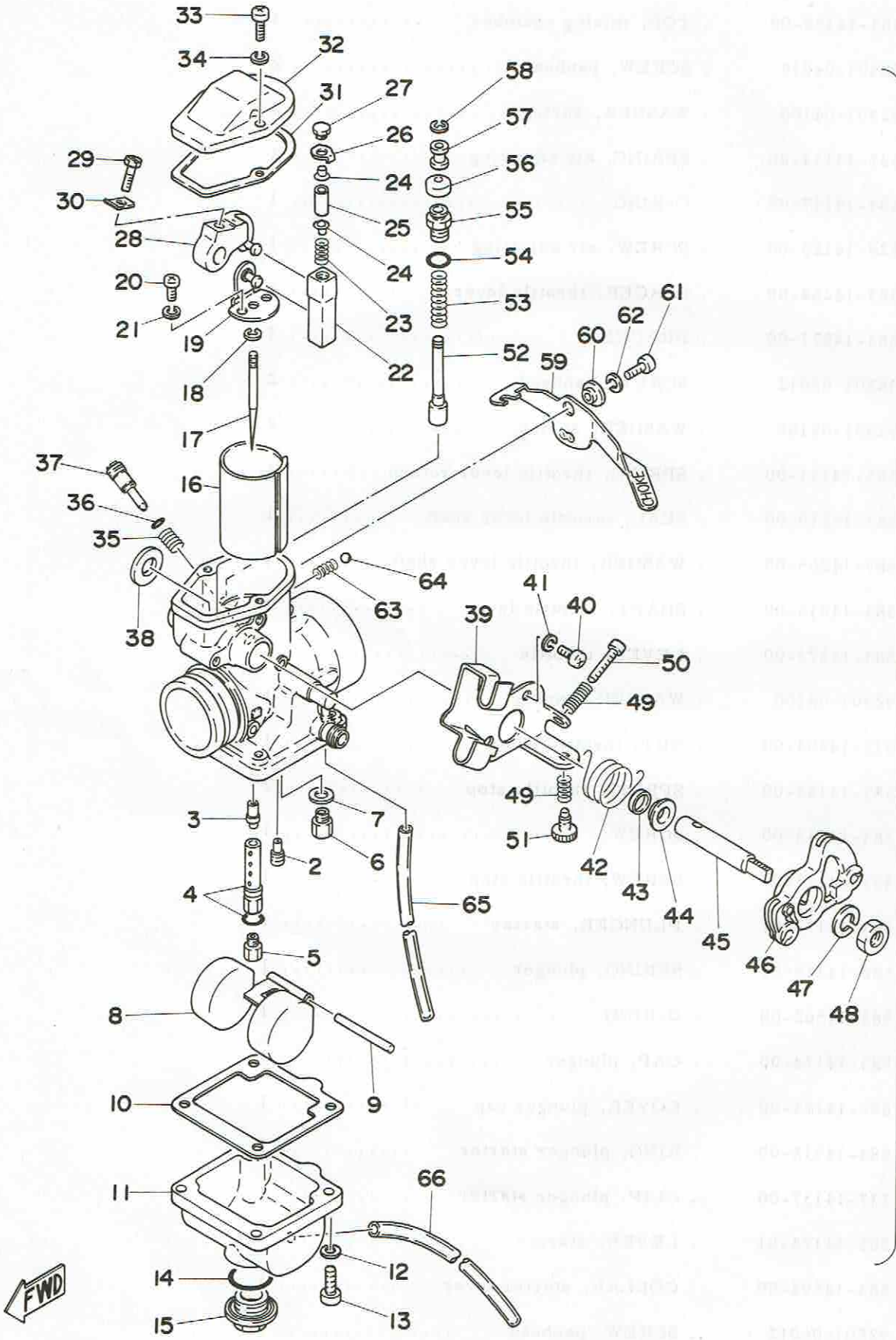

Ref. No.	Parts No.	Description	Q'ty	Applicable Machine No.	Remarks
16-63	583-14589-00	. SPRING	1		
64	93501-08001	. BALL (1/8 inch)	1		
65	583-14197-01	. PIPE, air vent (5-150)	1		
66	432-14197-00	. PIPE, over flow (3.5-350)	1		

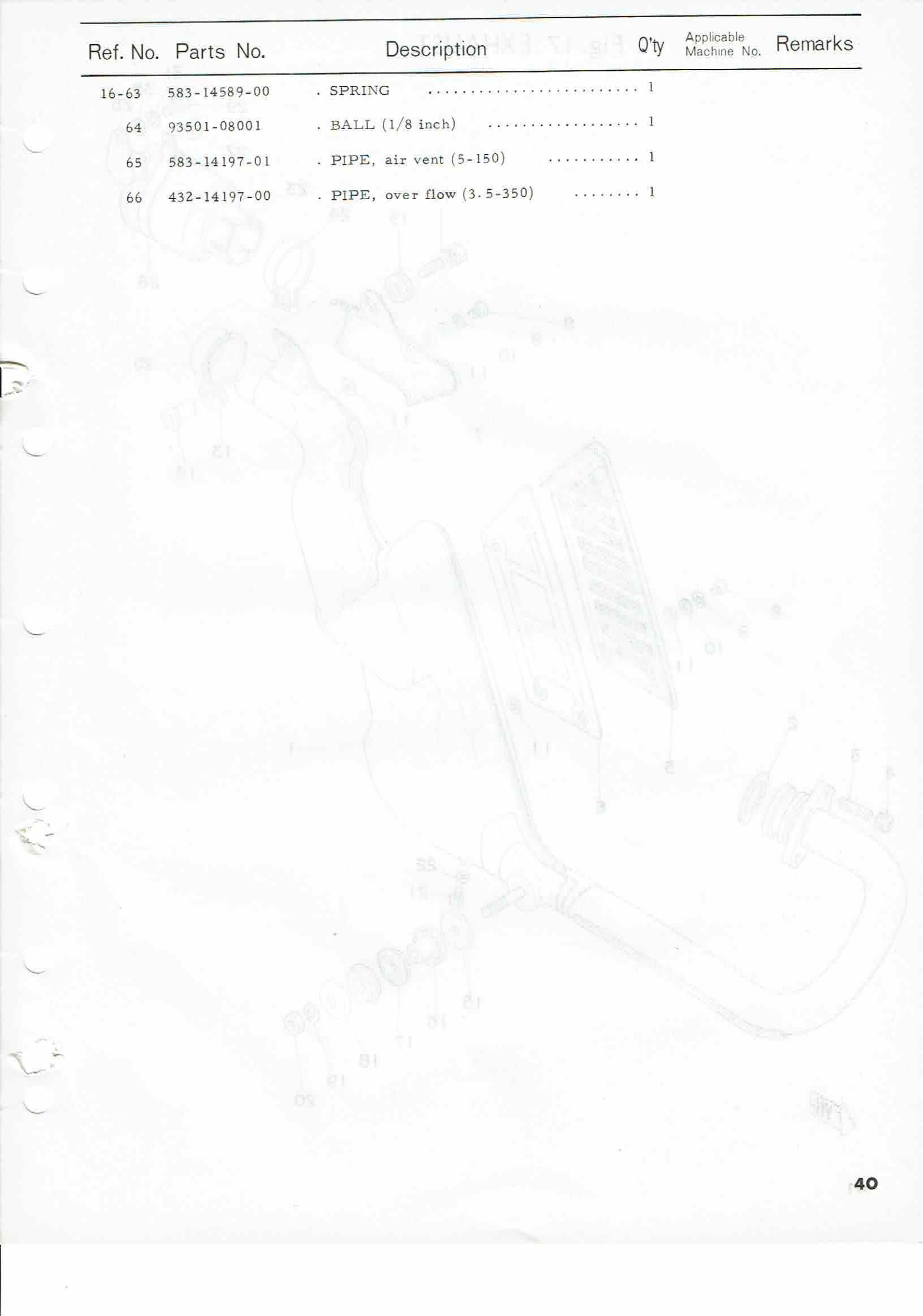

Fig. 17 EXHAUST

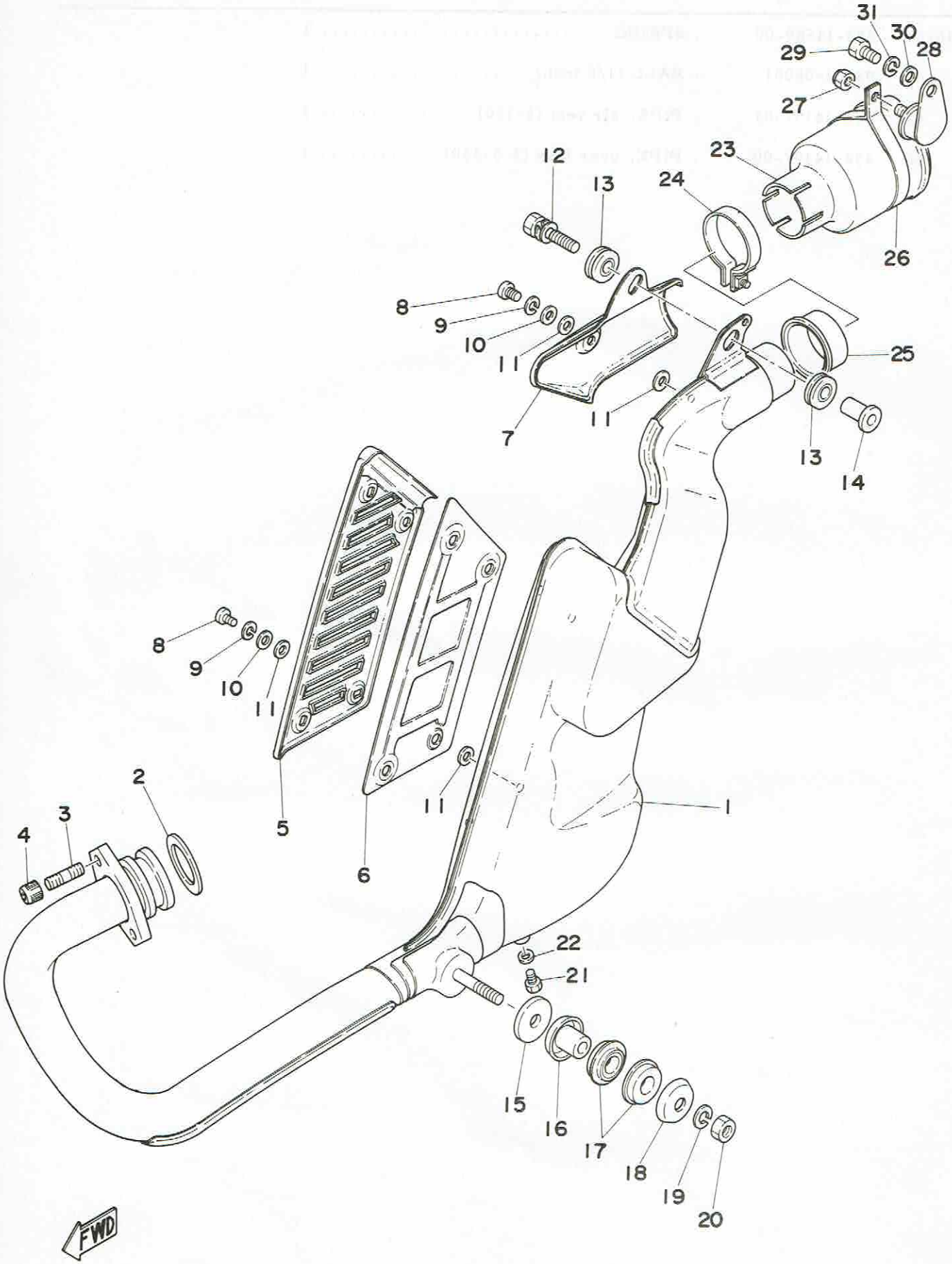

Ref. No.	Parts No.	Description	Q'ty	Applicable Machine No.	Remarks
17- 1	583-14610-02	EXHAUST PIPE ASS'Y	1		
2	90430-38054	GASKET (256-14613-00)	1		
3	95621-08615	BOLT, stud	2		
4	90179-08004	NUT	2		
5	583-14718-01	PROTECTOR, muffler 1	1		
6	583-14738-00	PROTECTOR, muffler 3	1		
7	583-14728-01	PROTECTOR, muffler 2	1		
8	91906-06012	SCREW, bind	5		
9	92901-06100	WASHER, spring	5		
10	92901-06200	WASHER, plain	5		
11	583-14766-00	WASHER, protecter	10		
12	90119-08014	BOLT	1		
13	583-14757-00	DAMPER, muffler 2	2		
14	90387-08527	COLLAR	1		
15	90202-10098	WASHER	1		
16	583-14763-00	SPACER	1		
17	583-14747-00	DAMPER, muffler	2		
18	90209-10140	WASHER	1		
19	92901-10100	WASHER, spring	1		
20	95301-10600	NUT	1		
21	97301-06010	BOLT, hexagon	1		
22	583-14766-00	WASHER, protector	1		
23	ACC-00002-71-00	SPARK ARRESTER ASS'Y	1		Skyway
24	ACC-00002-71-10	BAND, silencer	1		Skyway
25	583-14714-00	GASKET, muffler joint	1		
26	90461-14019	CLAMP	1		
27	95601-08100	NUT U	1		
28	560-14791-00	STAY, silencer	1		
29	97301-08016	BOLT, hexagon	1		
30	92901-08200	WASHER, plain	1		
31	92901-08100	WASHER, spring	1		

Fig. 18 FLYWHEEL MAGNETO

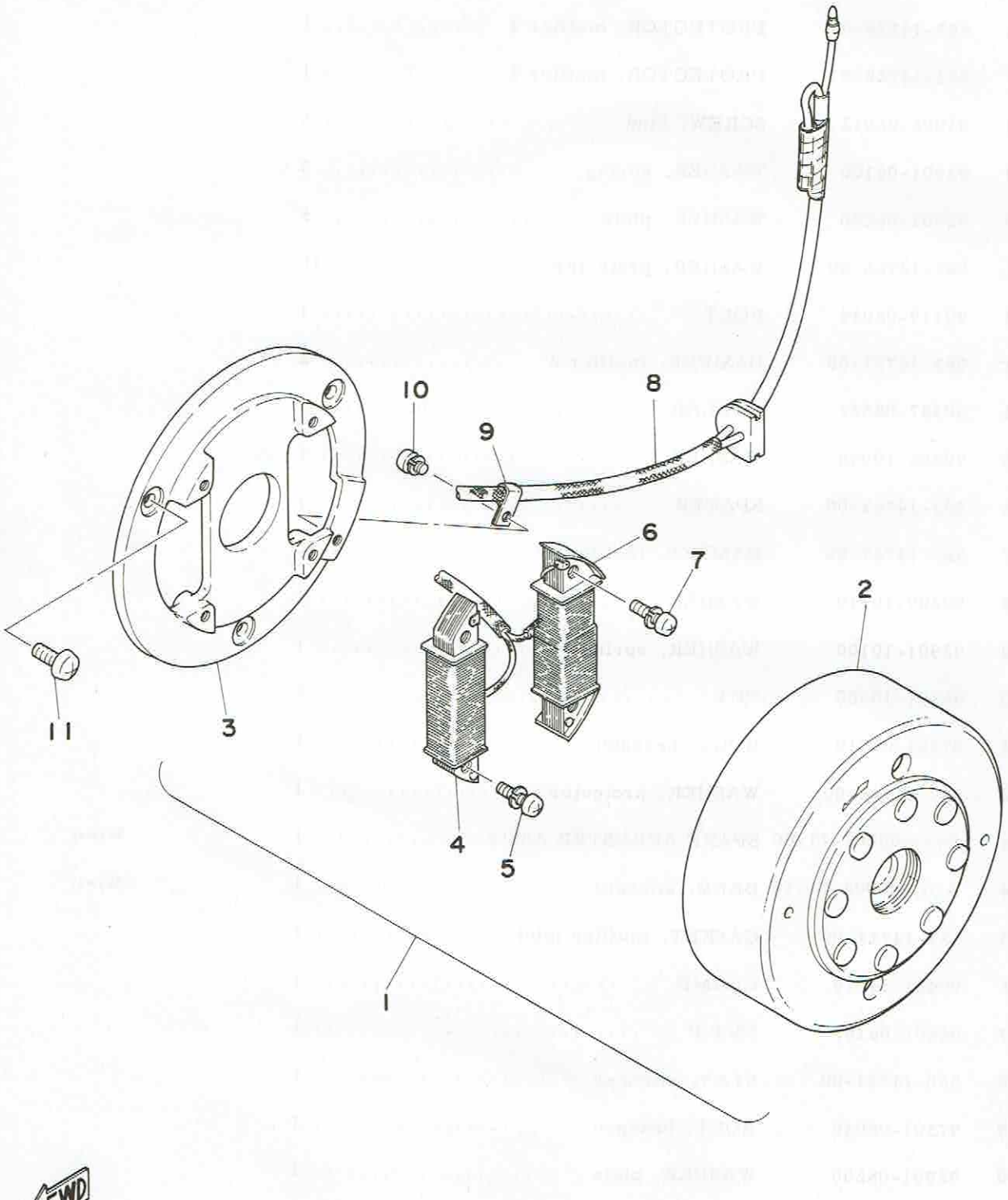

Ref. No.	Parts No.	Description	Q'ty	Applicable Machine No.	Remarks
18- 1	583-81300-50	FLYWHEEL MAGNETO ASS'Y	1		
2	583-81350-50	. ROTOR COMP.	1		
3	583-81309-50	. BASE, flywheel magneto	1		
4	583-81311-50	. COIL, ignition source	1		
5	583-81345-50	. SCREW, panhead (5-22)	2		
6	583-81313-50	. COIL, lighting	1		
7	583-81345-50	. SCREW, panhead (5-22)	2		
8	583-81315-50	. LEAD WIRE ASS'Y	1		
9	583-81328-50	. CLAMP, lead wire	1		
10	583-81346-50	. SCREW, panhead (4-6)	1		
11	92501-06015	SCREW, panhead	3		

CHASSIS

YAMAHA
PARTS

Fig. 19 FRAME · SIDE COVER

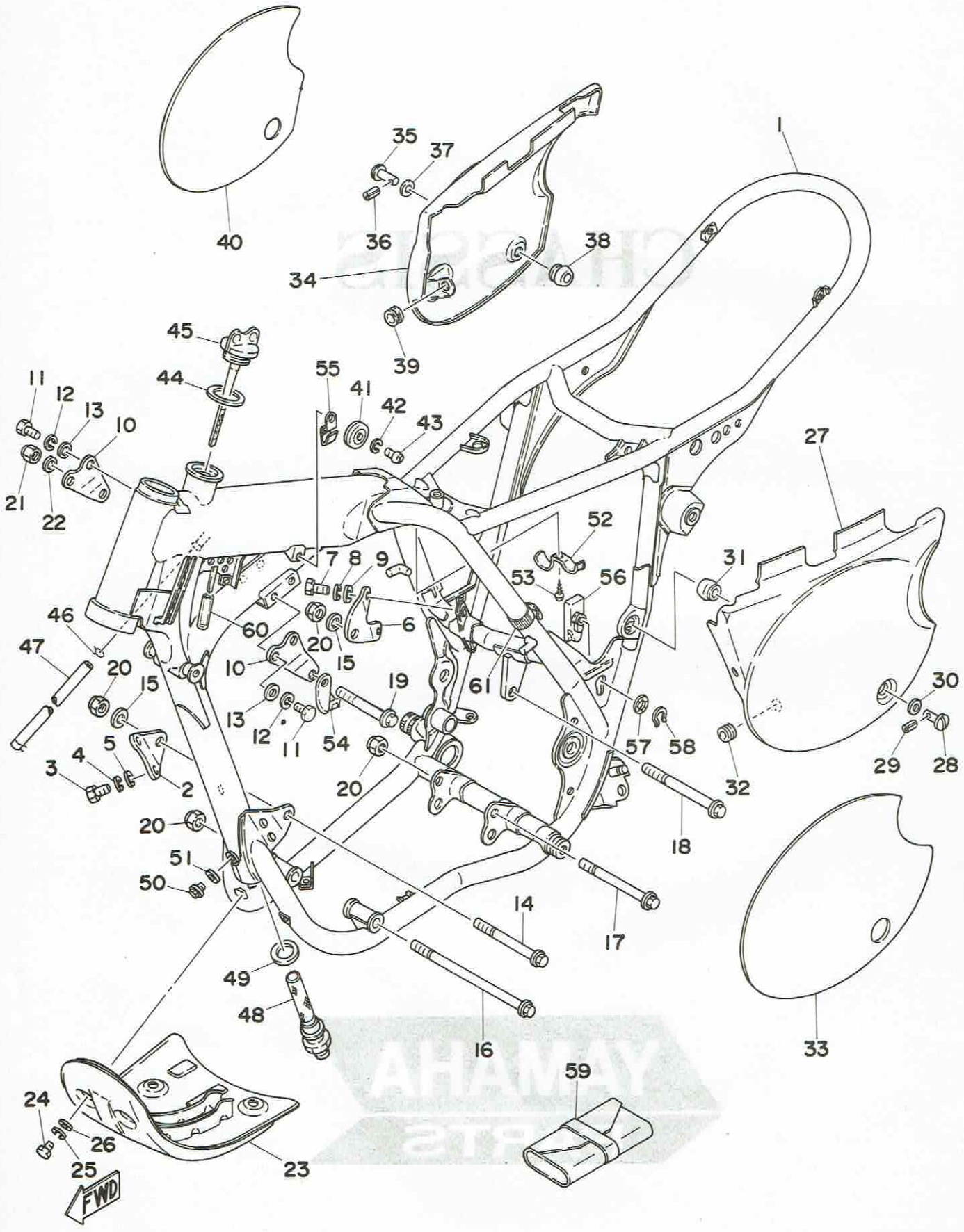

Ref. No.	Parts No.	Description	Q'ty	Applicable Machine No.	Remarks
19- 1	583-21110-01-33	FRAME COMP.	1		Yamaha Black
2	583-21316-00	STAY, engine mount	1		
3	97321-08025	BOLT	2		
4	92901-08100	WASHER, spring	2		
5	92901-08600	WASHER, plain	2		
6	583-21317-00	STAY, engine mount rear	1		
7	97321-08025	BOLT	2		
8	92901-08100	WASHER, spring	2		
9	92901-08600	WASHER, plate	2		
10	583-21315-00	STAY, engine 1	2		
11	97321-08018	BOLT	4		
12	92901-08100	WASHER, spring	4		
13	92901-08600	WASHER, plate	4		
14	90105-10039	BOLT	1		M10-100ℓ
15	90201-10126	WASHER, plate (647-11557-00)	2		
16	90105-10063	BOLT	1		M10-185ℓ
17	90105-10050	BOLT	1		M10-110ℓ
18	90105-10051	BOLT, flange	1		M10-115ℓ
19	90105-08064	BOLT, flange	1		M8-80ℓ
20	90185-10035	NUT, self locking	4		
21	90185-08054	NUT, self locking	1		
22	90208-08011	WASHER, conical spring (838-24746-00)	1		
23	583-21471-00	PROTECTOR, engine	1		
24	97301-06012	BOLT	4		
25	92901-06100	WASHER, spring	4		
26	92901-06600	WASHER, plain	4		
27	583-21711-00	COVER, side left	1		Clean White
28	583-21714-00	KNOB, side cover	1		
29	91609-25018	PIN, spring	1		
30	90201-06063	WASHER, plate (810-77318-00)	1		
31	583-21747-00	DAMPER, side cover	1		
32	90480-01176	GROMMET	1		

Fig. 19 FRAME · SIDE COVER

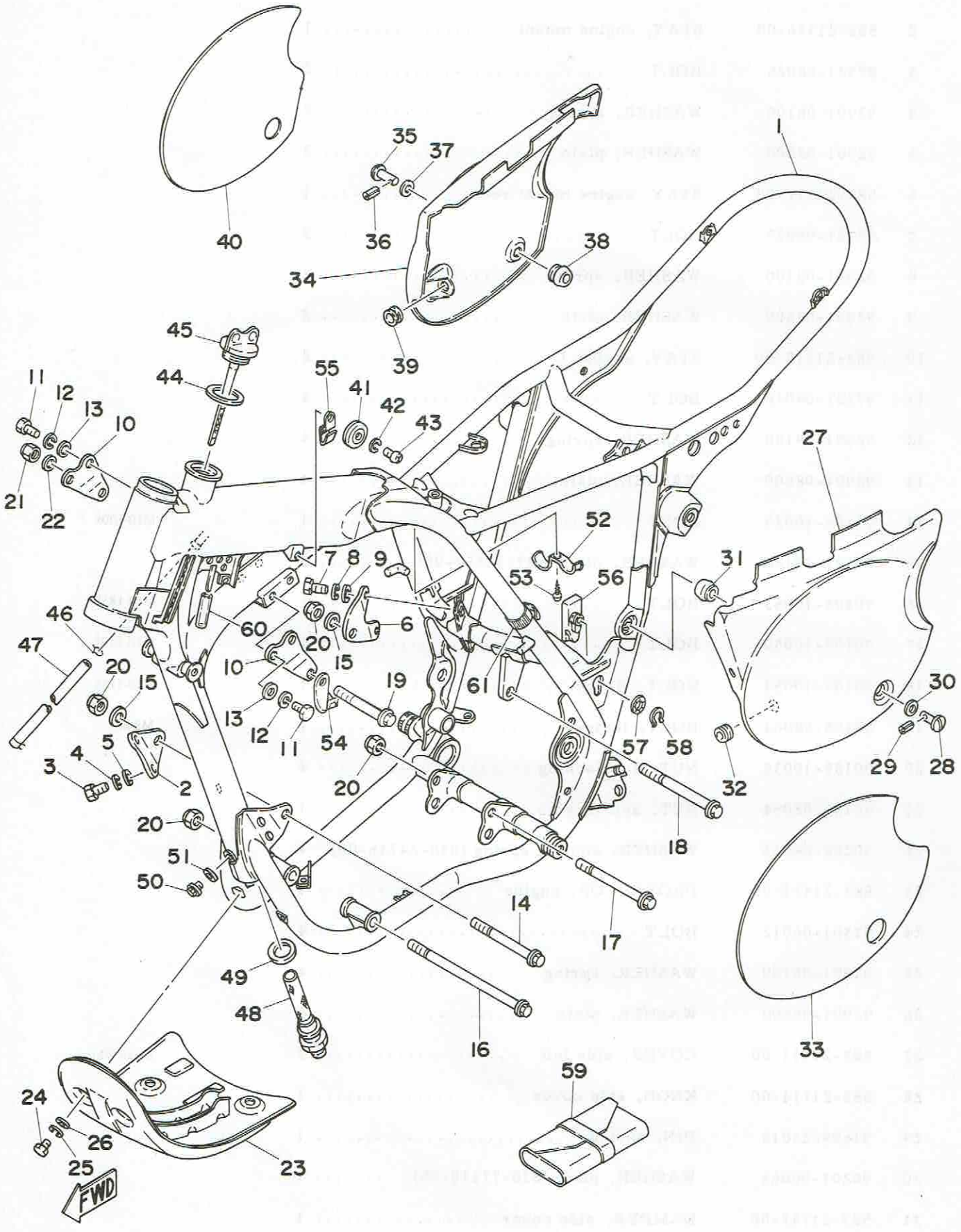

Ref. No.	Parts No.	Description	Q'ty	Applicable Machine No.	Remarks
19-33	583-21786-00	EMBLEM, side cover left	1		
34	583-21721-00	COVER, side right	1		Clean White
35	583-21714-00	KNOB, side cover	1		
36	91609-25018	PIN, spring	1		
37	90201-06063	WASHER, plate (810-77318-00)	1		
38	583-21747-00	DAMPER, side cover	1		
39	90480-01176	GROMMET	1		
40	583-21787-00	EMBLEM, side cover right	1		
41	583-24181-00	DAMPER, tank locating	2		
42	92901-05100	WASHER, spring	2		
43	98501-05012	SCREW, panhead	2		
44	90430-27124	GASKET	1		
45	583-21771-00	BODY, oil tank cap	1		
46	90467-10008	CLIP (143-24356-00)	2		
47	90445-11289	HOSE (7-200)	1		
48	583-21756-00	NET, oil tank filter	1		
49	90430-22123	GASKET	1		
50	90105-08003	BOLT, flange (834-16777-00)	1		
51	90430-08119	GASKET	1		
52	583-21755-00	CLAMP, oil pipe	1		
53	97701-50110	SCREW, panhead tapping	1		
54	90465-08090	CLAMP	1		
55	90465-06086	CLAMP	1		
56	583-22147-01	PROTECTOR, chain	1		
57	90206-15023	WASHER, wave	1		
58	93410-15005	CIRCLIP (S-15)	1		
59	583-28100-00	TOOL ASS'Y	1		
60	90446-07114	HOSE (6-40)	1		
61	437-83936-00	BAND	1		

Fig. 20 STAND · FOOTREST · BRAKE PEDAL

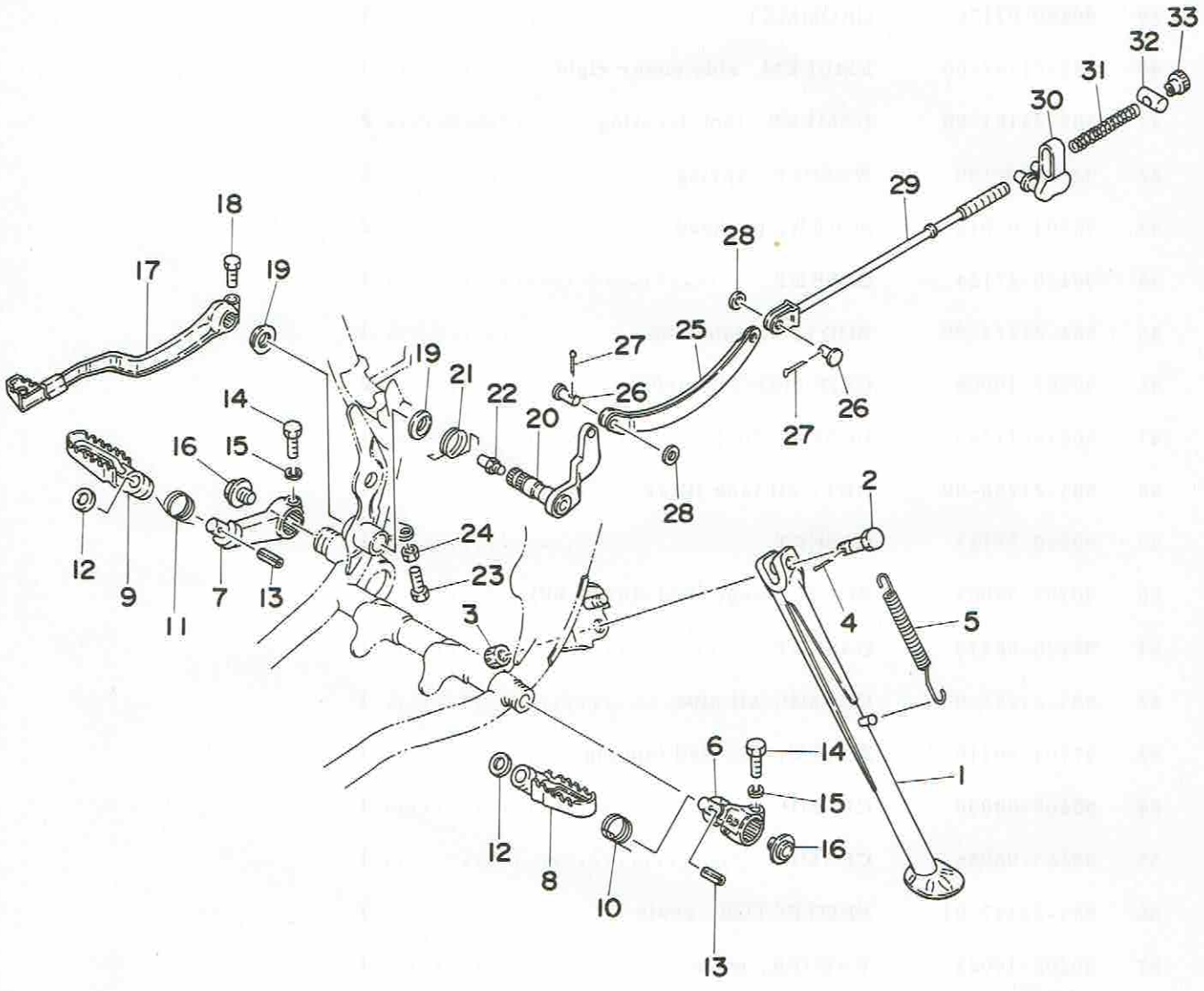

Ref. No.	Parts No.	Description	Q'ty	Applicable Machine No.	Remarks
20- 1	583-27311-00	STAND, side	1		
2	90102-10006	BOLT (278-27317-00)	1		
3	95302-10900	NUT, slotted	1		
4	91401-20025	PIN, cotter	1		
5	90507-29009	SPRING, tension	1		
6	583-27412-00	BRACKET, footrest left	1		
7	583-27422-00	BRACKET, footrest right	1		
8	583-27411-00	FOOTREST, left	1		
9	583-27421-00	FOOTREST, right	1		
10	90508-26277	SPRING, torsion	1		
11	90508-26276	SPRING, torsion	1		
12	90201-12174	WASHER, plate (183-22142-10)	2		
13	91609-30020	PIN, spring	2		
14	97301-08025	BOLT	2		
15	92901-08100	WASHER, spring	2		
16	90109-10174	BOLT	2		
17	583-27211-00-33	PEDAL, brake	1		
18	97301-06020	BOLT	1		
19	498-27235-00	COVER, dust	2		
20	583-27252-00	LEVER, brake pedal	1		
21	90508-32278	SPRING, torsion	1		
22	93700-06001	NIPPLE, grease	1		
23	90153-06008	SCREW	1		
24	90170-06184	NUT	1		
25	583-27241-00	JOINT, rod	1		
26	90240-08051	PIN, with hole	2		
27	91401-20012	PIN, cotter	2		
28	90201-08084	WASHER, plate	2		
29	583-27231-00	ROD, brake	1		
30	583-27244-00	COVER, brake rod	1		

Fig. 20 STAND · FOOTREST · BRAKE PEDAL

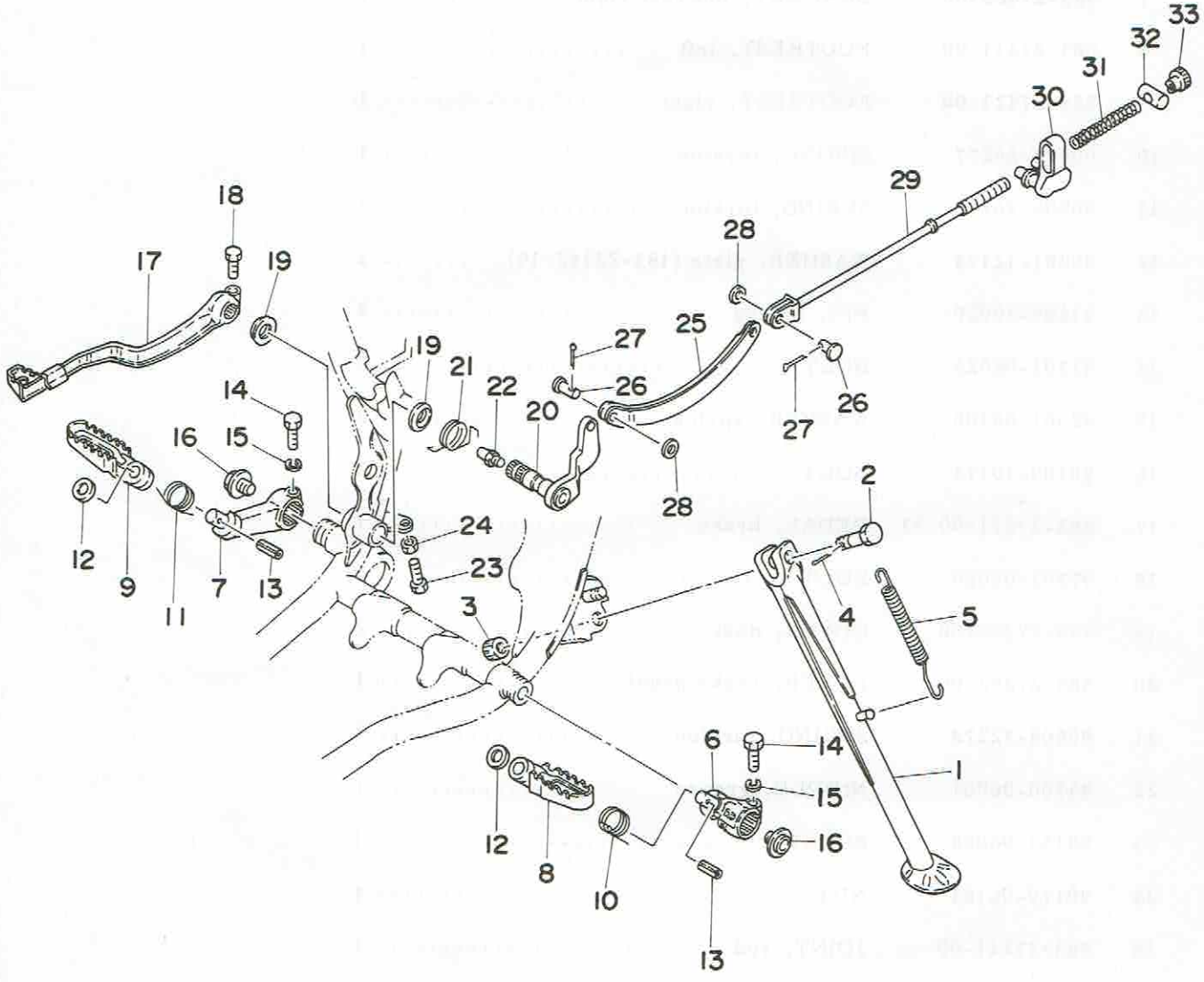

FWD

Ref. No.	Parts No.	Description	Q'ty	Applicable Machine No.	Remarks
20-31	90501-10245	SPRING, rod (180-27236-00)	1		
32	90249-12069	PIN (431-27237-00)	1		
33	90179-06006	NUT, adjusting	1		

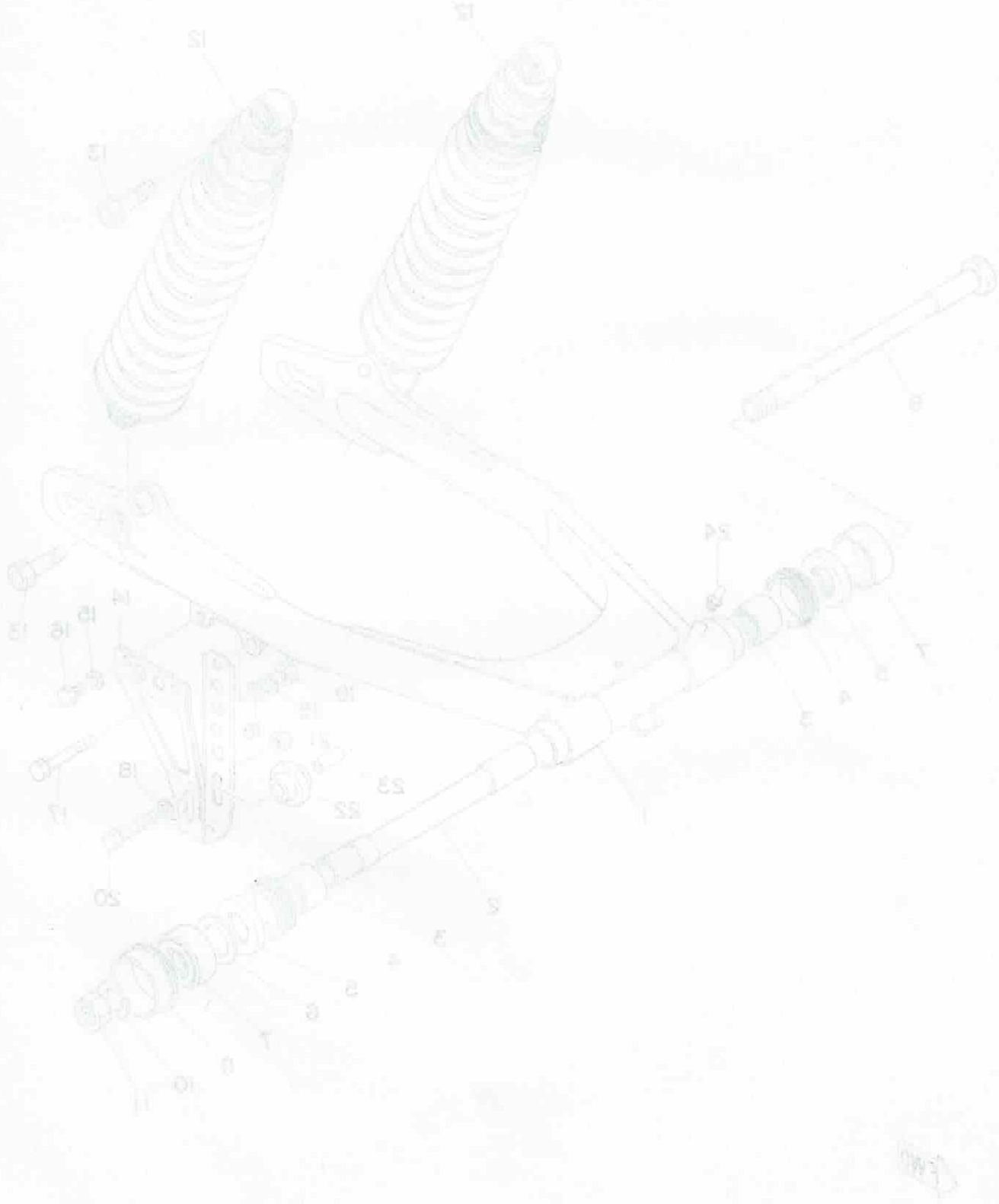

Fig. 21 REAR ARM · REAR CUSHION

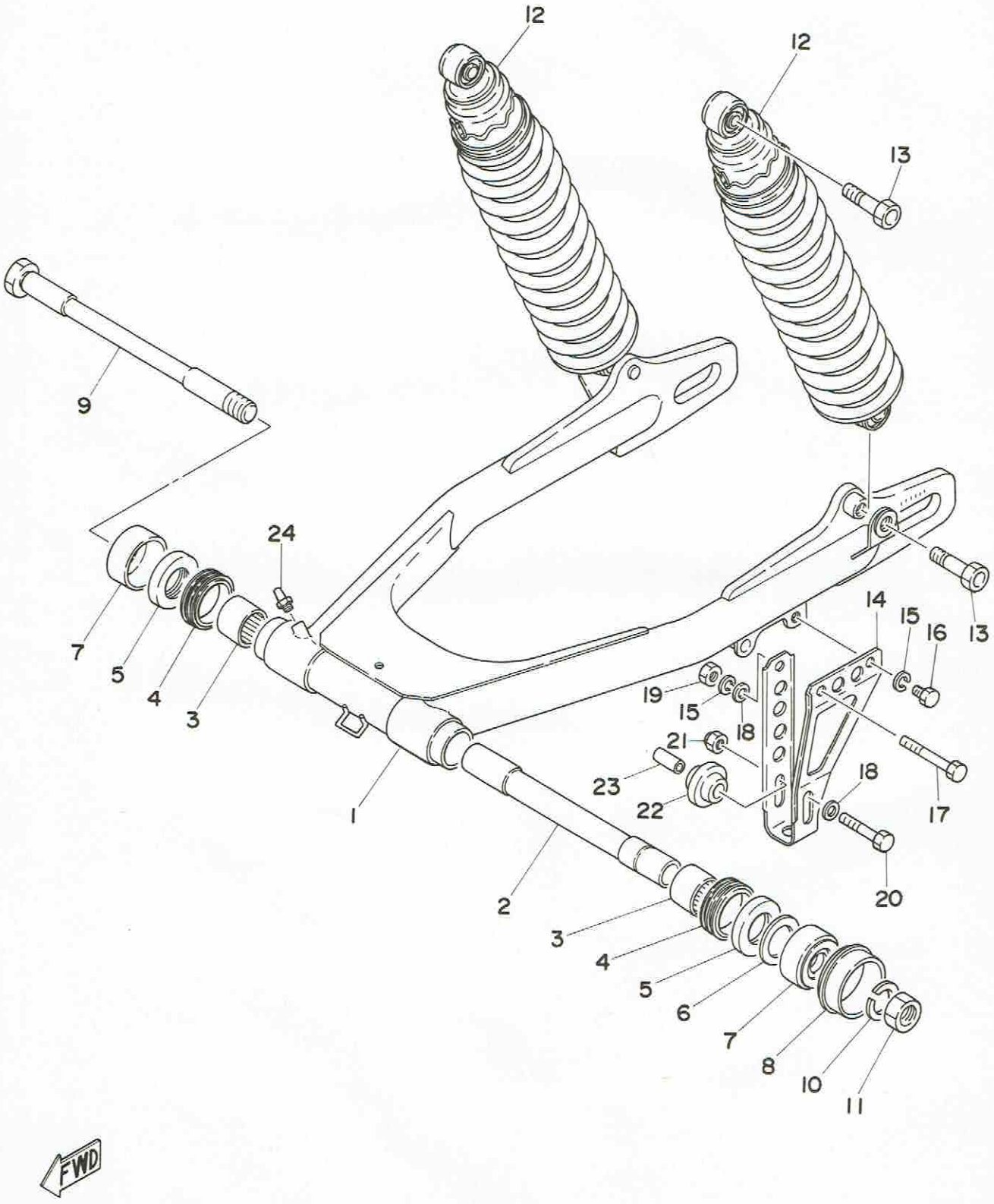

Ref. No.	Parts No.	Description	Q'ty	Applicable Machine No.	Remarks
21- 1	583-22110-00-33	REAR ARM COMP.	1		Yamaha Black
2	483-22124-00	BUSHING	1		
3	93317-22208	BEARING	2		
4	93108-35004	OIL SEAL (OSO-35-41.5-8)	2		
5	93342-22205	BEARING	2		
6	90201-22284	WASHER, plate	U.R		
7	483-22129-00	COVER, thrust	2		
8	431-22151-01	SEAL, guard	1		
9	583-22141-00	SHAFT, pivot	1		
10	92901-16100	WASHER, spring	1		
11	90170-16111	NUT	1		
12	583-22210-00	REAR CUSHION ASS'Y	2		
13	90109-10420	BOLT	4		
14	322-22153-00-33	GUARD, chain	1		Yamaha Black
15	92901-06100	WASHER, spring	2		
16	97301-06010	BOLT	1		
17	97301-06050	BOLT	1		
18	92901-06600	WASHER, plate	2		
19	95301-06600	NUT	1		
20	97301-06040	BOLT	1		
21	95601-06100	NUT U	1		
22	322-22178-00	TENSIONER, chain	1		
23	90560-06003	SPACER (322-22137-00)	1		
24	93700-06001	NIPPLE, grease	1		

Fig. 22 FRONT FENDER · REAR FENDER

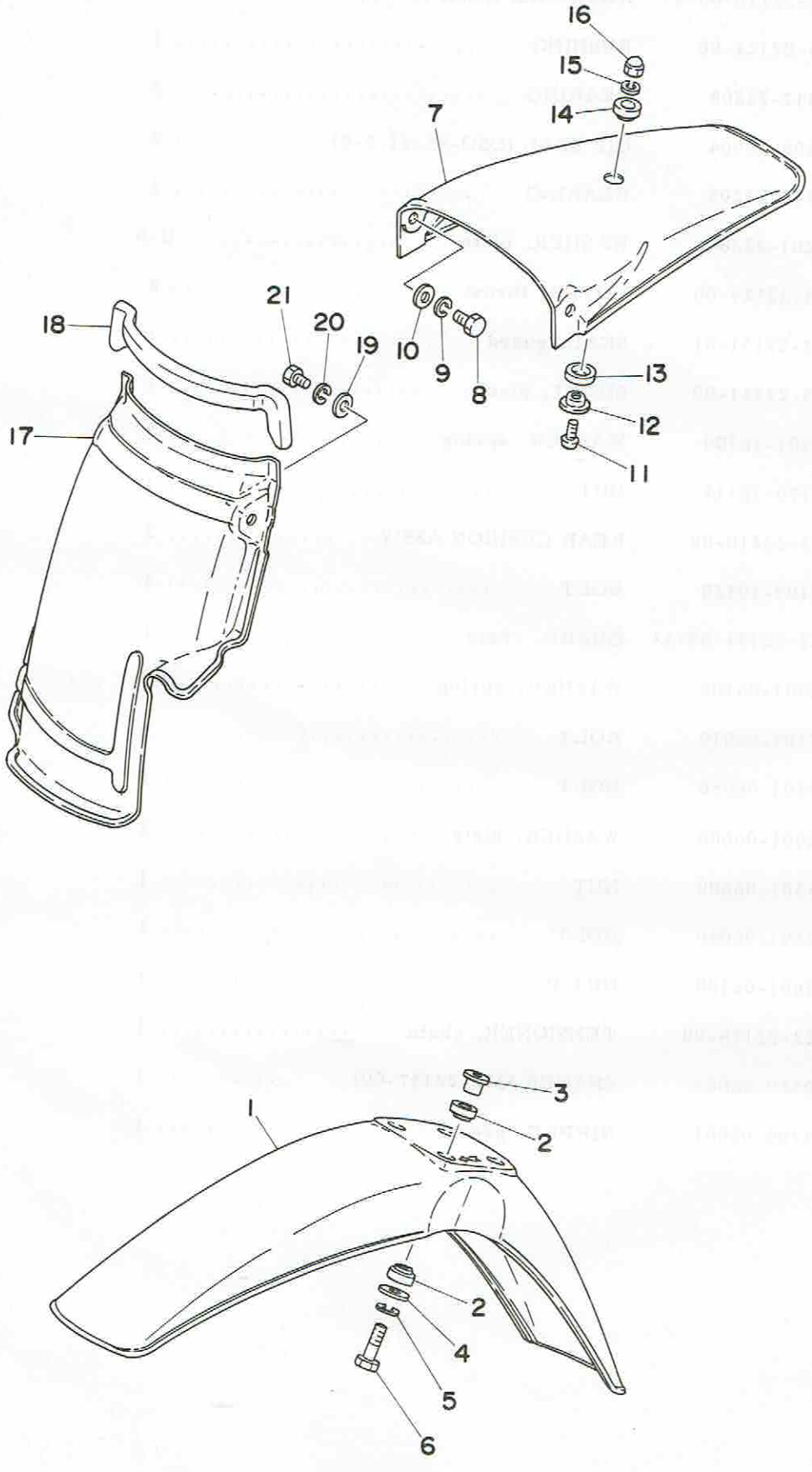

Ref. No.	Parts No.	Description	Q'ty	Applicable Machine No.	Remarks
22- 1	583-21511-00	FENDER, front	1		Clean White
2	322-21541-00	DAMPER, fender	8		
3	90387-06388	COLLAR (322-21544-00)	4		
4	90201-06339	WASHER, plate	4		
5	92901-06100	WASHER, spring	4		
6	97301-06030	BOLT	4		
7	583-21611-00	FENDER, rear	1		Clean White
8	97321-06014	BOLT	2		
9	92901-06100	WASHER, spring	2		
10	90201-06571	WASHER, plate	2		
11	92501-06018	SCREW, panhead	1		
12	90209-06087	WASHER (322-21615-00)	1		
13	322-21639-00	DAMPER, fender mount	1		
14	322-21541-00	DAMPER, fender	1		
15	92901-06100	WASHER, spring	1		
16	95303-06800	NUT, crown	1		
17	583-21629-00	GUARD, mud	1		
18	583-21746-00	SEAL, box	1		
19	90201-06571	WASHER, plate	3		
20	92901-06100	WASHER, spring	3		
21	97321-06014	BOLT	3		

Fig. 23 FRONT FORK

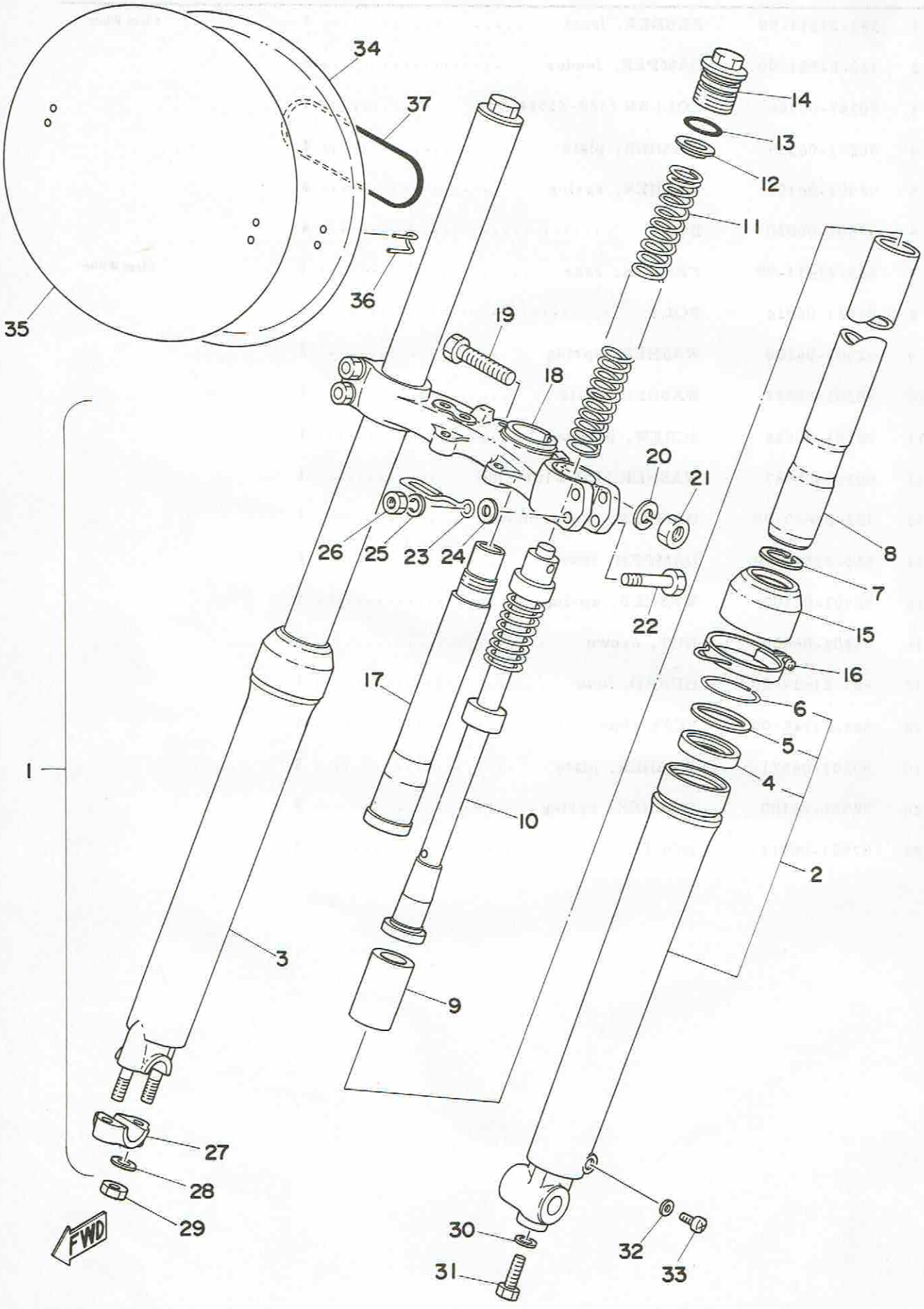

Ref. No.	Parts No.	Description	Q'ty	Applicable Machine No.	Remarks
23- 1	583-23101-00	FRONT FORK ASS'Y	1		
2	583-23126-00	. TUBE, outer left	1		
3	583-23136-00	. TUBE, outer right	1		
4	583-23145-00	. . OIL SEAL	1		
5	341-23146-50	. . WASHER, oil seal	1		
6	341-23156-50	. . CLIP, oil seal	1		
7	93450-30039	. CIRCLIP	2		
8	583-23124-00	. TUBE, inner	2		
9	583-23171-00	. PISTON, front fork	2		
10	583-23170-00	. CYLINDER COMP., front fork	2		
11	583-23141-00	. SPRING, front fork	2		
12	583-23142-00	. SEAT, spring upper	2		
13	240-23114-00	. O-RING	2		
14	583-23111-00	. BOLT, cap	2		
15	583-23144-00	. SEAL, dust	2		
16	583-23318-00	. HOLDER, wire	1		
17	322-23341-00	. SHAFT, steering	1		
18	583-23345-00-33	. UNDER BRACKET COMP.	1		Yamaha Black
19	322-23356-00	. BOLT	1		
20	92901-10100	. WASHER, spring	1		
21	322-23357-00	. NUT	1		
22	90109-08397	. BOLT	4		
23	583-23317-00	. HOLDER, wire	1		
24	90201-08083	. WASHER, plate (156-27226-00)	4		
25	92901-08100	. WASHER, spring	4		
26	90170-08180	. NUT	4		
27	291-23167-60	. HOLDER, axle	1		
28	92901-08600	. WASHER, plain	2		
29	90185-08054	. NUT	2		
30	278-23158-50	. GASKET	2		
31	278-23181-50	. BOLT	2		
32	122-23129-00	. GASKET, drain plug	2		

Fig. 23 FRONT FORK

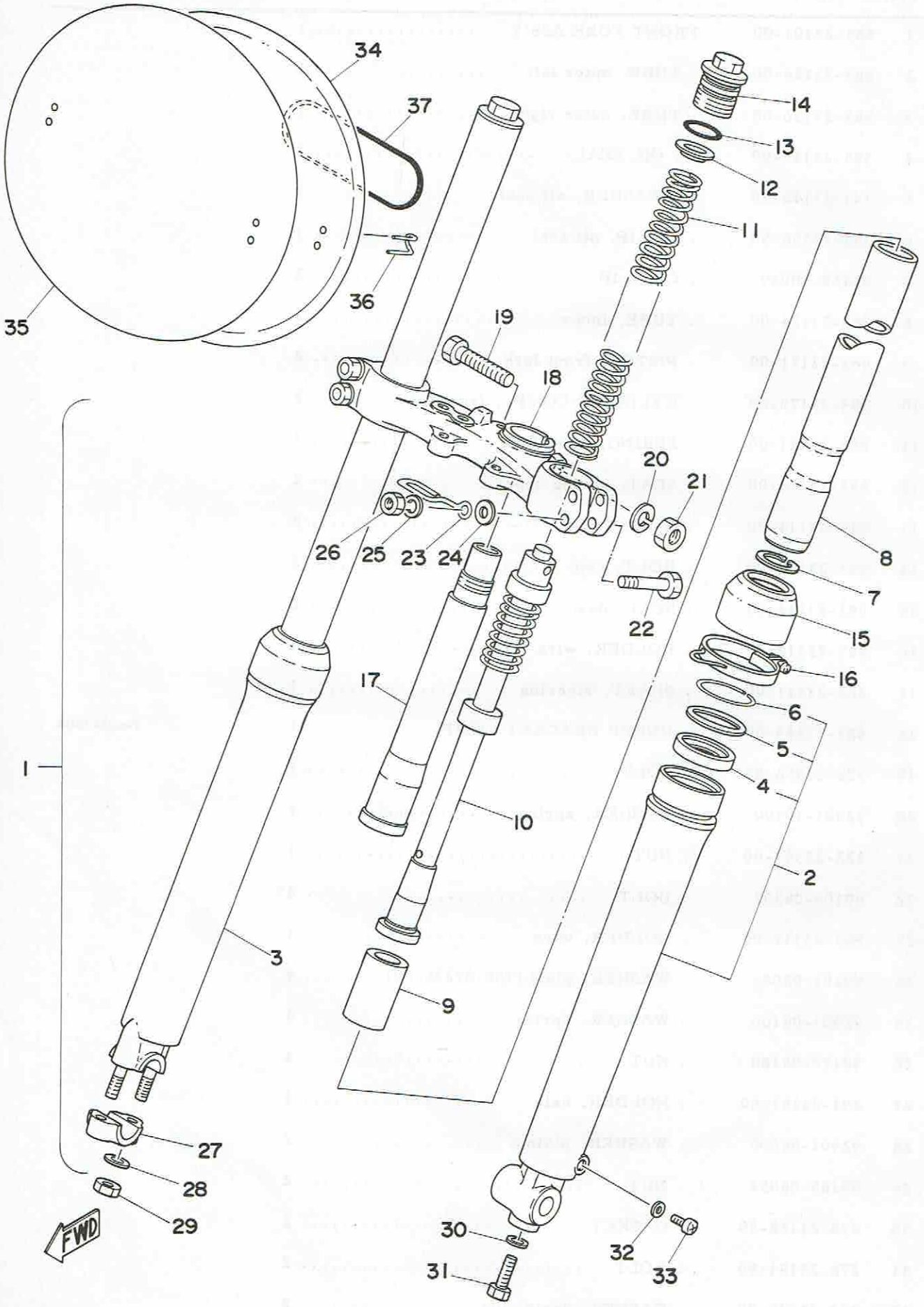

Ref. No.	Parts No.	Description	Q'ty	Applicable Machine No.	Remarks
23-33	122-23119-01	PLUG, drain	2		
34	583-23485-00	PLATE, number	1		
35	322-23395-00	EMBLEM, number	1		
36	431-23486-02	STAY, number plate	2		
37	93210-99184	O-RING (3.1-99.4)	1		

Fig. 24 STEERING

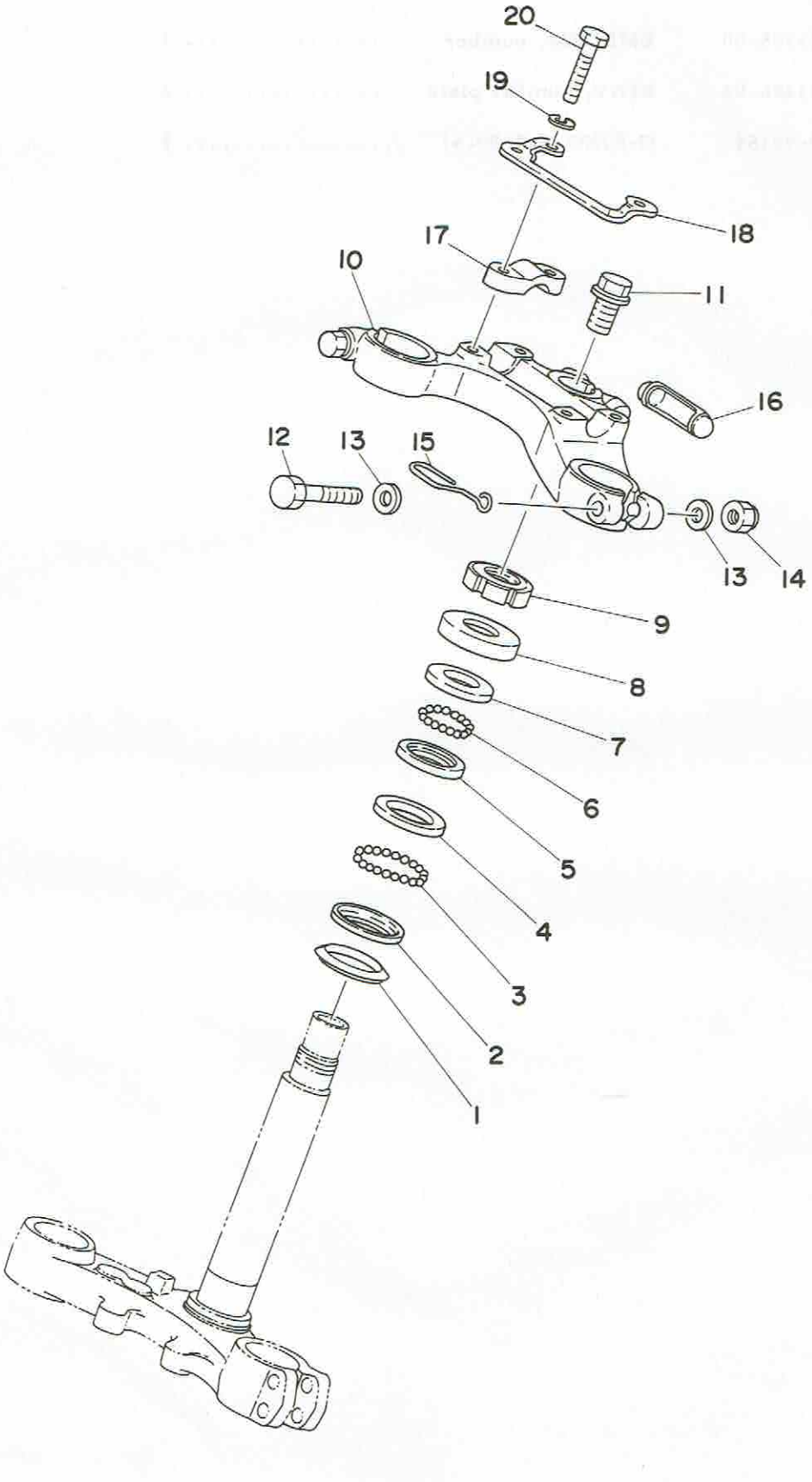

Ref. No.	Parts No.	Description	Q'ty	Applicable Machine No.	Remarks
24- 1	164-23462-00	SEAL, dust	1		
2	156-23411-00	RACE, ball 1	1		
3	93501-04011	BALL (1/4 inch)	19		
4	156-23412-00	RACE, ball 2	1		
5	122-23412-00	RACE, ball 2	1		
6	93503-16010	BALL (3/16 inch)	22		
7	122-23411-00	RACE, ball 1	1		
8	122-23416-00	COVER, ball race	1		
9	90179-25033	NUT (137-23454-00)	1		
10	583-23435-00-98	CROWN, handle	1		Frosting Black
11	90105-14060	BOLT	1		
12	97313-08055	BOLT	3		
13	90201-08083	WASHER, plate (156-27226-00)	6		
14	95601-08100	NUT U	3		
15	583-23317-00	HOLDER, wire	1		
16	583-23469-00	CAP, bolt	1		
17	401-23441-00-98	HOLDER, handle upper	2		Frosting Black
18	583-23389-00	GUIDE, wire	1		
19	92901-08100	WASHER, spring	4		
20	97323-08035	BOLT	4		

Fig. 25 HANDLE · WIRE

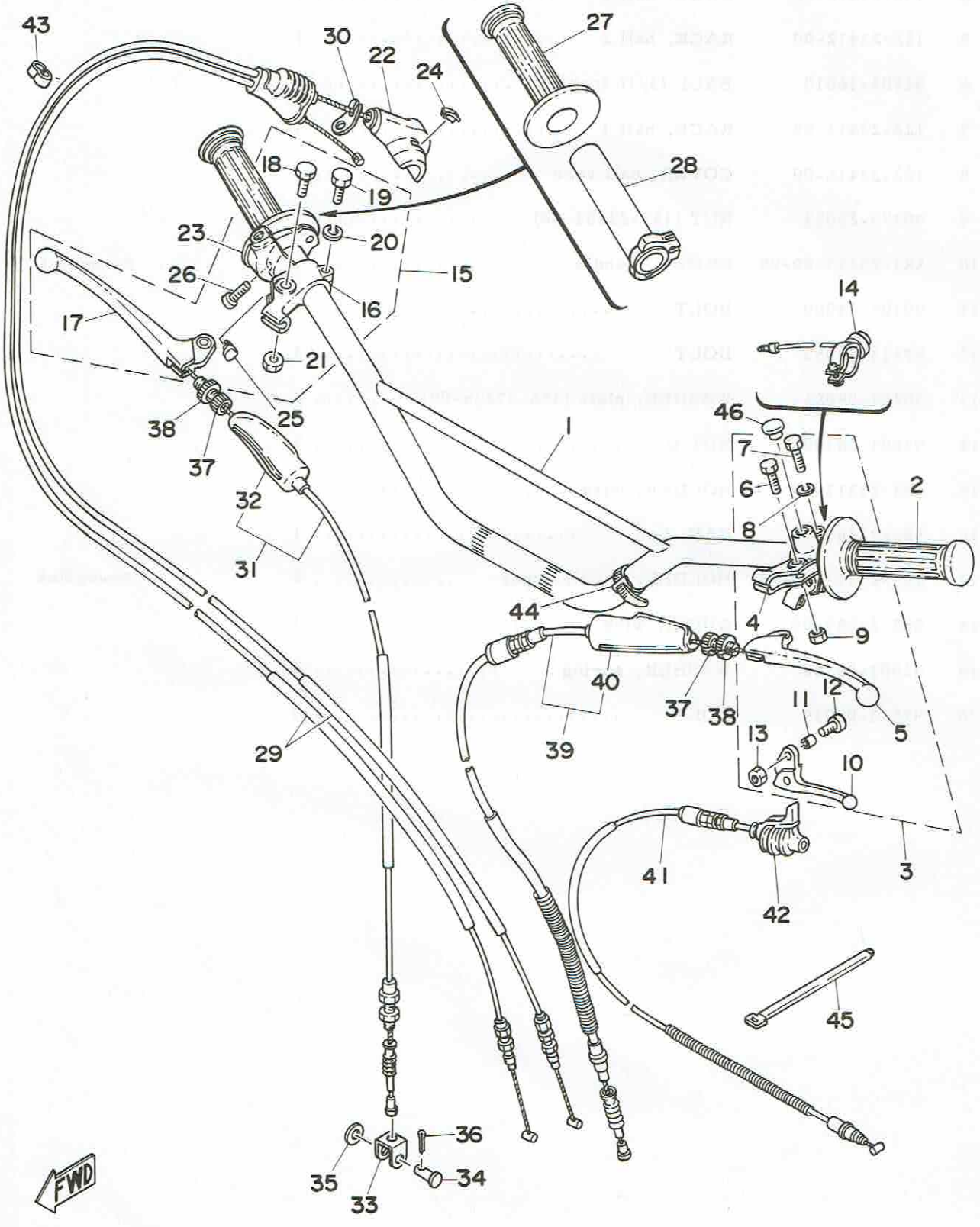

Ref. No.	Parts No.	Description	Q'ty	Applicable Machine No.	Remarks
25- 1	583-26111-00	HANDLE	1		
2	583-26241-00	GRIP, left	1		
3	583-82910-01	LEVER HOLDER ASS'Y, left	1		
4	583-82911-01	. HOLDER, lever left	1		
5	583-83912-00	. LEVER, left	1		
6	90109-06410	. BOLT	1		
7	97301-06022	. BOLT	1		
8	92901-06100	. WASHER, spring	1		
9	95601-06100	. NUT U	1		
10	583-83981-00	. LEVER, decompression	1		
11	583-83913-00	. COLLAR, decompression lever	1		
12	98501-05018	. SCREW, panhead	1		
13	95601-05100	. NUT U	1		
14	583-83976-00	SWITCH, handle 1	1		
15	583-82920-01	LEVER HOLDER ASS'Y, right	1		
16	233-82921-31	. HOLDER, lever right	1		
17	583-83922-00	. LEVER, right	1		
18	90109-06410	. BOLT	1		
19	97301-06022	. BOLT	1		
20	92901-06100	. WASHER, spring	1		
21	95601-06100	. NUT U	1		
22	583-83986-00	CASE, switch upper	1		
23	583-83987-00	CASE, switch under	1		
24	583-83956-00	CAP 1	1		
25	583-83957-00	CAP 2	1		
26	98501-05018	SCREW, panhead	2		
27	583-26242-00	GRIP, right	1		
28	583-26243-00	TUBE, guide	1		
29	583-26301-00	THROTTLE WIRE ASS'Y	1		
30	583-26398-00	WASHER, special	1		
31	483-26341-01	WIRE, brake front (1150mm)	1		
32	382-26372-01	. COVER, lever	1		

Fig. 25 HANDLE · WIRE

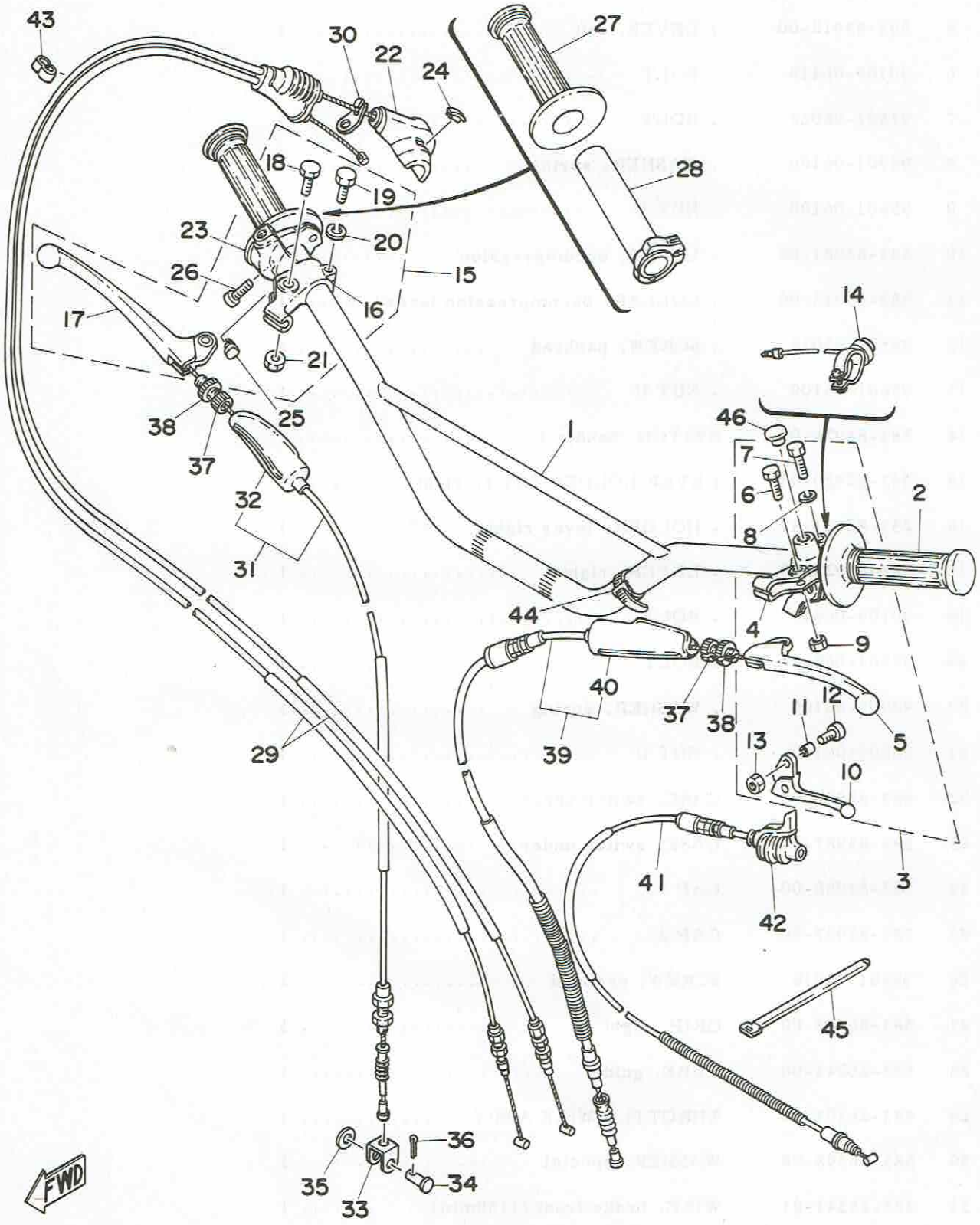

Ref. No.	Parts No.	Description	Q'ty	Applicable Machine No.	Remarks
25-33	156-26347-00	JOINT, wire	1		
34	90240-08012	PIN, with hole (156-27229-00)	1		
35	90201-08083	WASHER, plate (156-27226-00)	1		
36	91401-20012	PIN, cotter	1		
37	90123-08046	BOLT, wire adjusting (168-26337-00)	2		
38	90179-08162	NUT (322-26344-00)	2		
39	583-26335-00	WIRE, clutch (1100mm)	1		
40	382-26372-01	. COVER, lever	1		
41	583-26331-00	WIRE, decompression (800mm)	1		
42	583-26352-00	COVER, decompression wire	1		
43	90468-15009	CLIP, wire (207-26391-00)	2		
44	437-83936-00	BAND	2		
45	341-26397-01	BAND	1		
46	90338-09012	PLUG (341-26329-00)	1		

Fig. 26 FUEL TANK

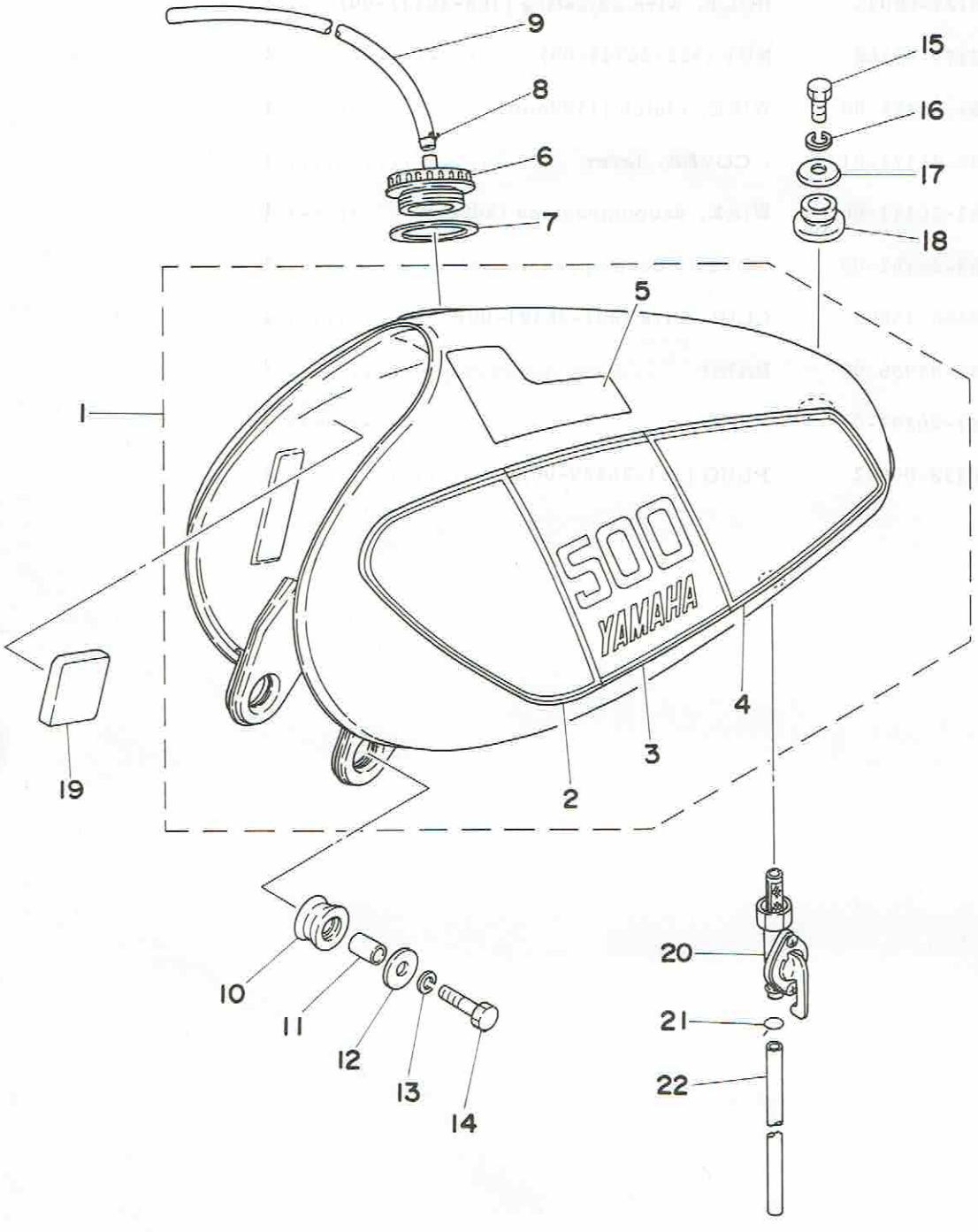

Ref. No.	Parts No.	Description	Q'ty	Applicable Machine No.	Remarks
26- 1	583-24110-00-01	FUEL TANK COMP.	1		Clean White
2	583-24244-00	. GRAPHIC, fuel tank 1 (left)	1		
	583-24248-00	. GRAPHIC, fuel tank 1 (right)	1		
3	583-24245-00	. GRAPHIC, fuel tank 2 (left)	1		
	583-24249-00	. GRAPHIC, fuel tank 2 (right)	1		
4	583-24246-00	. GRAPHIC, fuel tank 3 (left)	1		
	583-24254-00	. GRAPHIC, fuel tank 3 (right)	1		
5	583-24247-00	. GRAPHIC, fuel tank 4 (left)	1		
	583-24255-00	. GRAPHIC, fuel tank 4 (right)	1		
6	322-24611-01	BODY, tank cap	1		
7	90430-35122	GASKET	1		
8	90467-10008	CLIP (143-24356-00)	1		
9	90445-09111	HOSE (129-24311-00 5-430)	1		
10	90480-22177	GROMMET	2		
11	90387-09506	COLLAR	2		
12	90201-06570	WASHER, plate	2		
13	92901-06100	WASHER, spring	2		
14	97321-06030	BOLT	2		
15	97301-08015	BOLT	1		
16	92901-08100	WASHER, spring	1		
17	90209-08097	WASHER (101-24186-00)	1		
18	90480-22054	GROMMET	1		
19	583-24182-00	DAMPER, tank locating	2		
20	322-24500-02	FUEL COCK ASS'Y	1		
21	90467-11010	CLIP	1		
22	90445-11288	HOSE (7-180)	1		

Fig. 27 SEAT

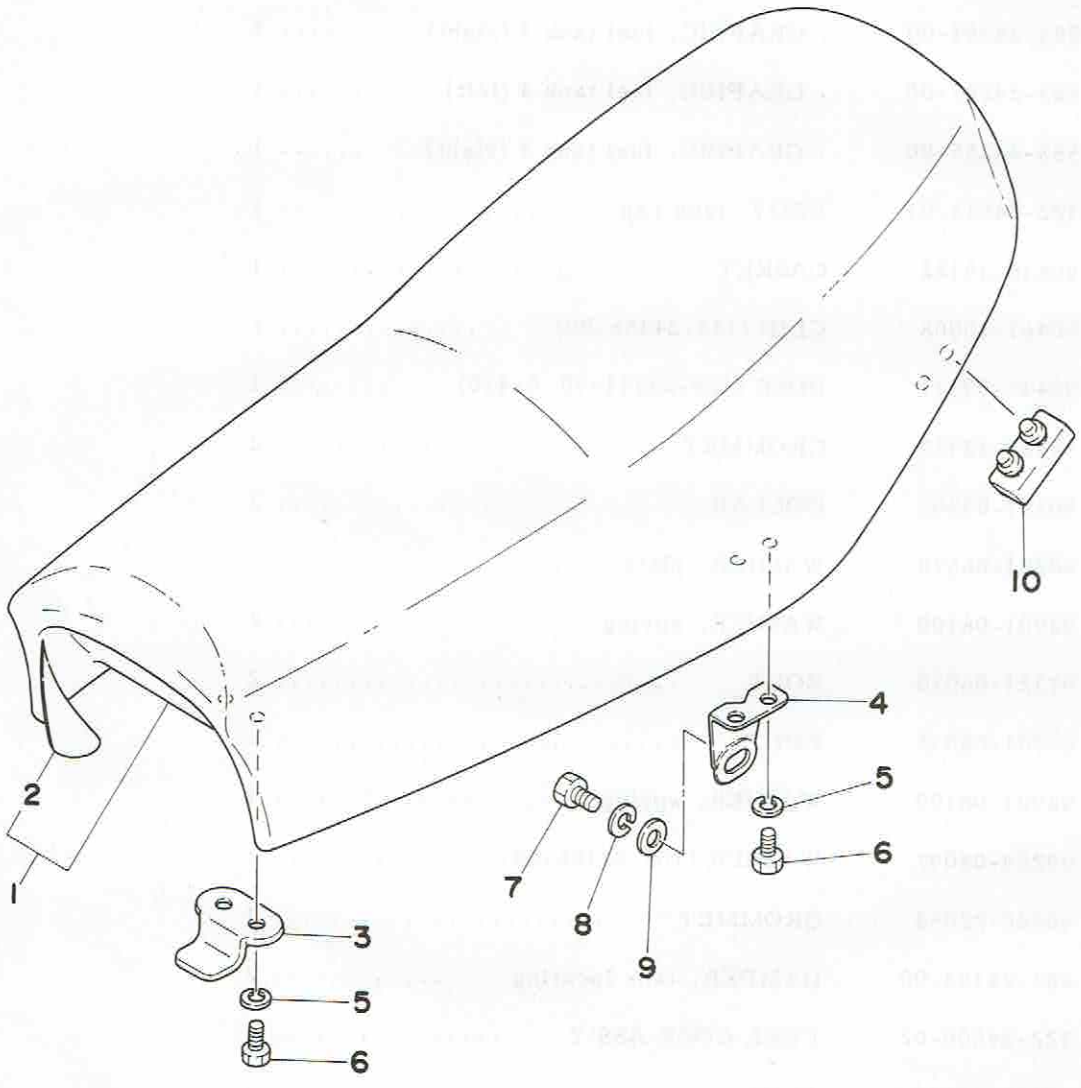

Ref. No.	Parts No.	Description	Q'ty	Applicable Machine No.	Remarks
27- 1	583-24770-00	SEMI DOUBLE SEAT ASS'Y	1		
2	583-24731-00	. COVER, semi double seat	1		
3	322-24748-00	BRACKET, seat front	1		
4	583-24738-00	BRACKET, seat rear	2		
5	92901-06100	WASHER, spring	6		
6	97301-06015	BOLT	6		
7	97321-08015	BOLT	2		
8	92901-08100	WASHER, spring	2		
9	92901-08600	WASHER, plain	2		
10	583-24724-00	DAMPER, seat	2		

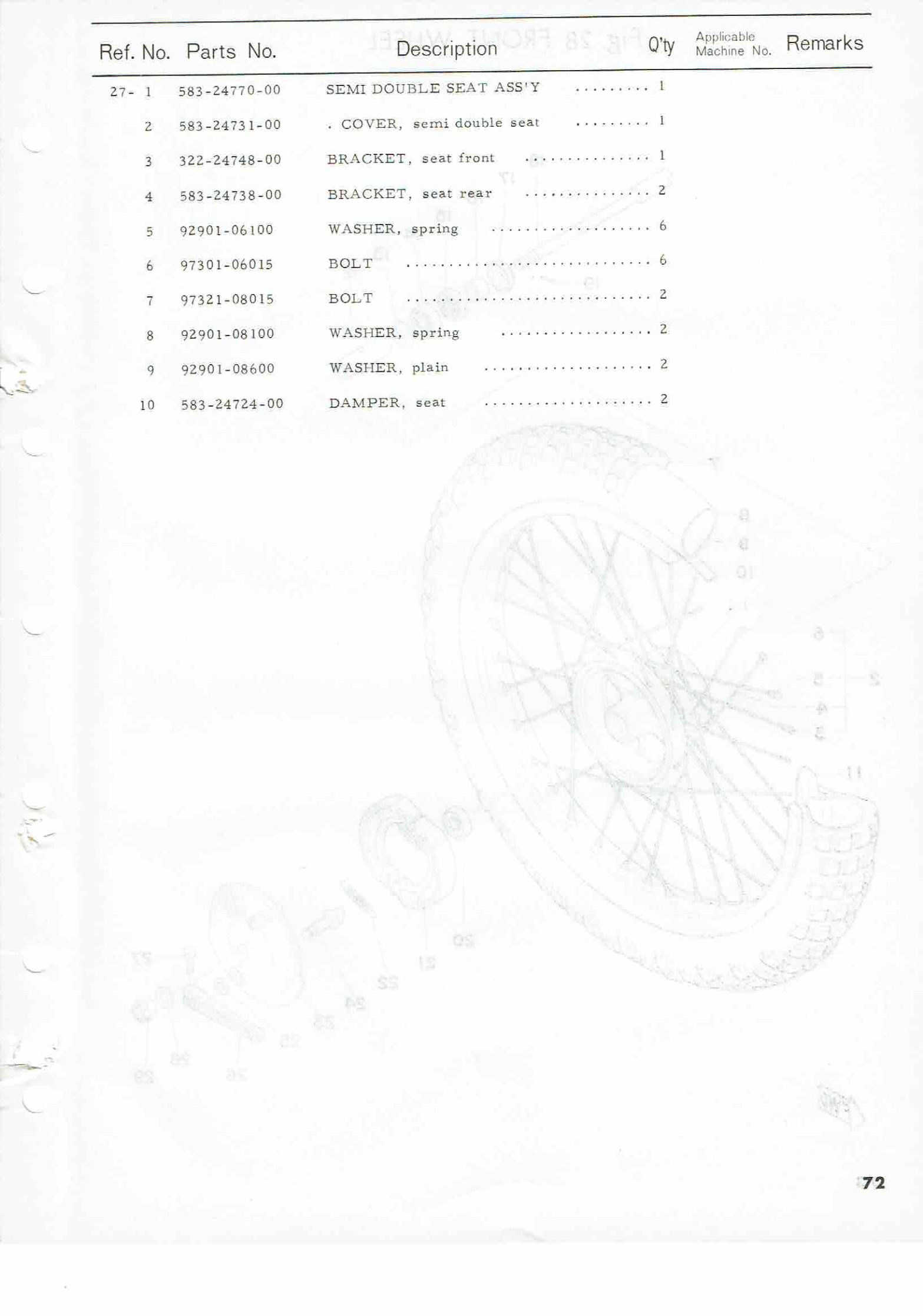

Fig. 28 FRONT WHEEL

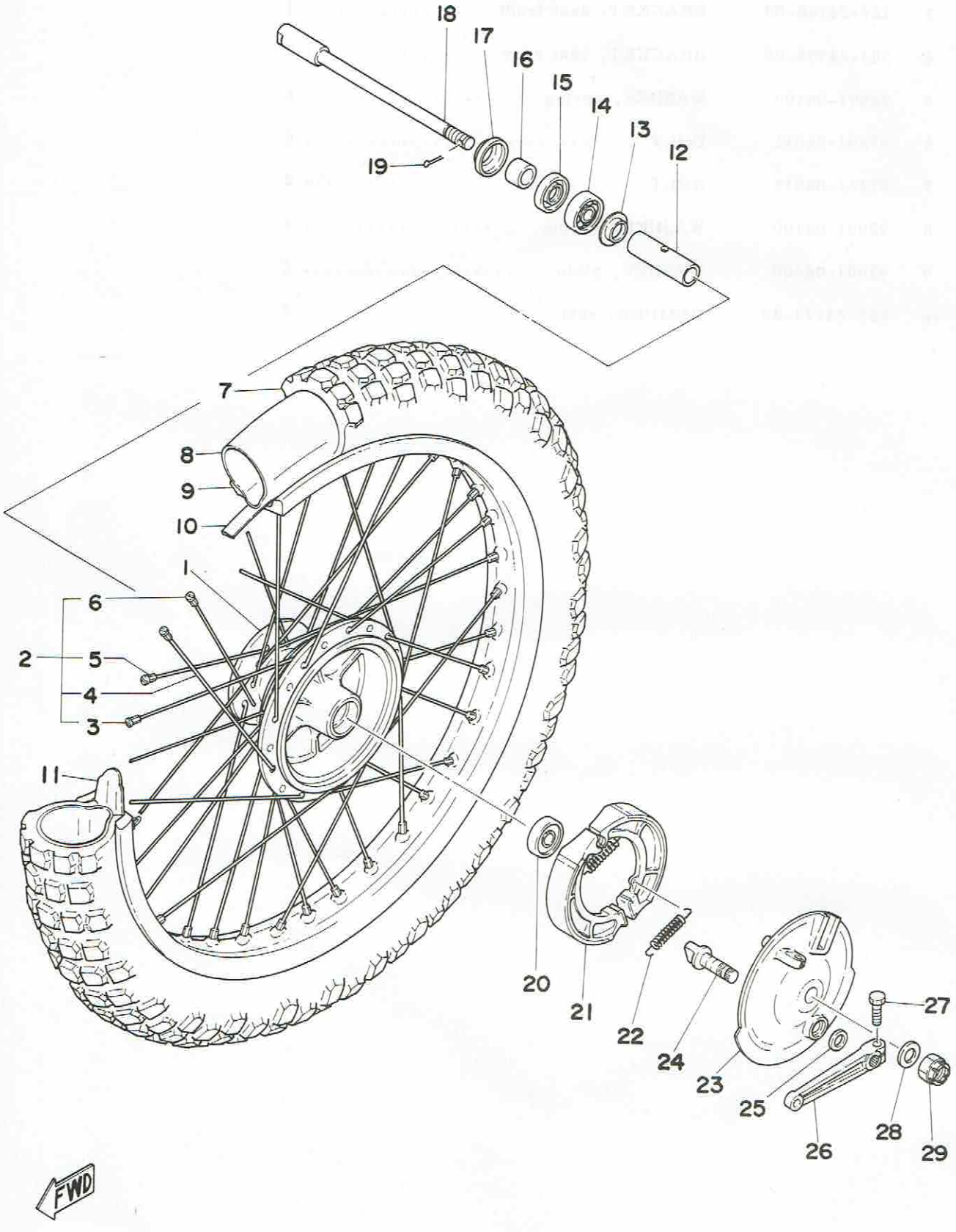

Ref. No.	Parts No.	Description	Q'ty	Applicable Machine No.	Remarks
28- 1	583-25111-00-98	HUB, front	1		Frosting Black
2	583-25104-00	SPOKE SET	1s		
3	583-25196-90	. SPOKE SET, inner left (10PCS)	1s		
4	583-25197-90	. SPOKE SET, outer left (10PCS)	1s		
5	583-25179-90	. SPOKE SET, inner right (10PCS)	1s		
6	583-25189-90	. SPOKE SET, outer right (10PCS)	1s		
7	94130-21096	TIRE, front (3.00-21-4PR)	1		
8	94230-21038	TUBE, front (3.00-21)	1		
9	94416-21150	RIM, front (1.60A-21)	1		
10	94327-21024	BAND, rim (2.75-21)	1		
11	214-25194-00	SPACER, bead	1		
12	90560-15116	SPACER, bearing (322-25117-00)	1		
13	146-25116-00	FLANGE, spacer 2	1		
14	93306-20205	BEARING (B6202)	1		
15	93102-20009	OIL SEAL (SD-20-35-7)	1		
16	90387-15418	COLLAR (322-25183-00)	1		
17	322-25118-00	COVER, hub dust	1		
18	583-25181-00	SHAFT, wheel	1		
19	91401-30030	PIN, cotter	1		
20	93306-20203	BEARING (B6202RS)	1		
21	322-25130-00	BRAKE SHOE COMP.	2		
22	90506-16036	SPRING, tension (183-25333-00)	2		
23	483-25121-00-98	PLATE, brake shoe	1		Frosting Black
24	322-25151-00	CAMSHAFT	1		
25	137-25159-00	SEAL, camshaft	1		
26	322-25155-00	LEVER, camshaft	1		
27	97301-06025	BOLT	1		
28	92901-14200	WASHER, plain	1		
29	90171-14006	NUT, castle (214-25182-01)	1		

Fig. 29 REAR WHEEL

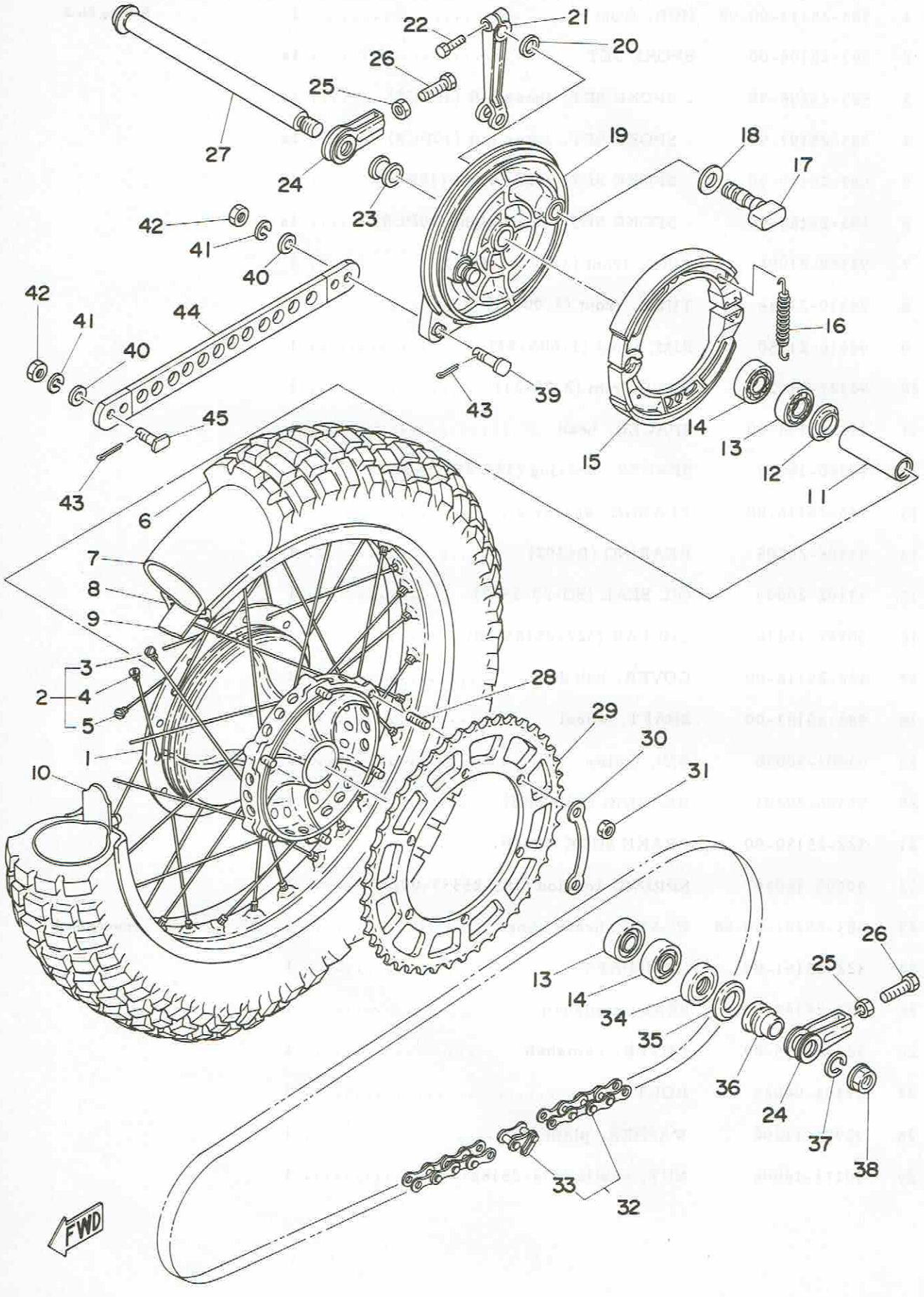

Ref. No.	Parts No.	Description	Q'ty	Applicable Machine No.	Remarks
29- 1	483-25311-12-98	HUB, rear	1		Frosting Black
2	431-25304-00	SPOKE SET	1s		
3	431-25396-90	. SPOKE SET, inner left (10PCS)	1s		
4	431-25391-90	. SPOKE SET, inner right (10PCS)	1s		
5	431-25392-90	. SPOKE SET, outer right (10PCS)	1s		
6	94146-18109	TIRE, rear (4.60-18-4PR)	1		
7	94246-18040	TUBE, rear (4.60-18)	1		
8	94421-18151	RIM, rear (2.15B-18)	1		
9	94340-18022	BAND, rim (4.00-18)	1		
10	363-25394-00	SPACER, bead	2		
11	483-25317-01	SPACER, bearing	1		
12	483-25315-00	FLANGE, spacer	1		
13	93306-20309	BEARING (B6203)	2		
14	93306-20303	BEARING (B6203Z)	2		
15	431-25330-01	BRAKE SHOE COMP.	2		
16	90507-20002	SPRING, tension (246-25333-00)	2		
17	509-25351-00	CAMSHAFT	1		
18	90564-14021	SHIM, camshaft	1		
19	483-25321-00-98	PLATE, brake shoe	1		Frosting Black
20	148-25359-00	SEAL, camshaft	1		
21	431-25355-00	LEVER, camshaft	1		
22	97301-06025	BOLT	1		
23	90387-17215	COLLAR	1		
24	583-25388-00	PULLER, chain	2		
25	95303-08700	NUT	2		
26	90101-08034	BOLT (168-25379-00)	2		
27	431-25381-00	SHAFT, wheel	1		
28	90116-08218	BOLT, stud	6		
29	583-25450-10	GEAR, sprocket wheel (50T)	U.R 1		STD
	583-25452-10	GEAR, sprocket wheel (52T)			
	583-25454-10	GEAR, sprocket wheel (54T)			
30	509-25412-00	WASHER, lock	3		

Fig. 29 REAR WHEEL

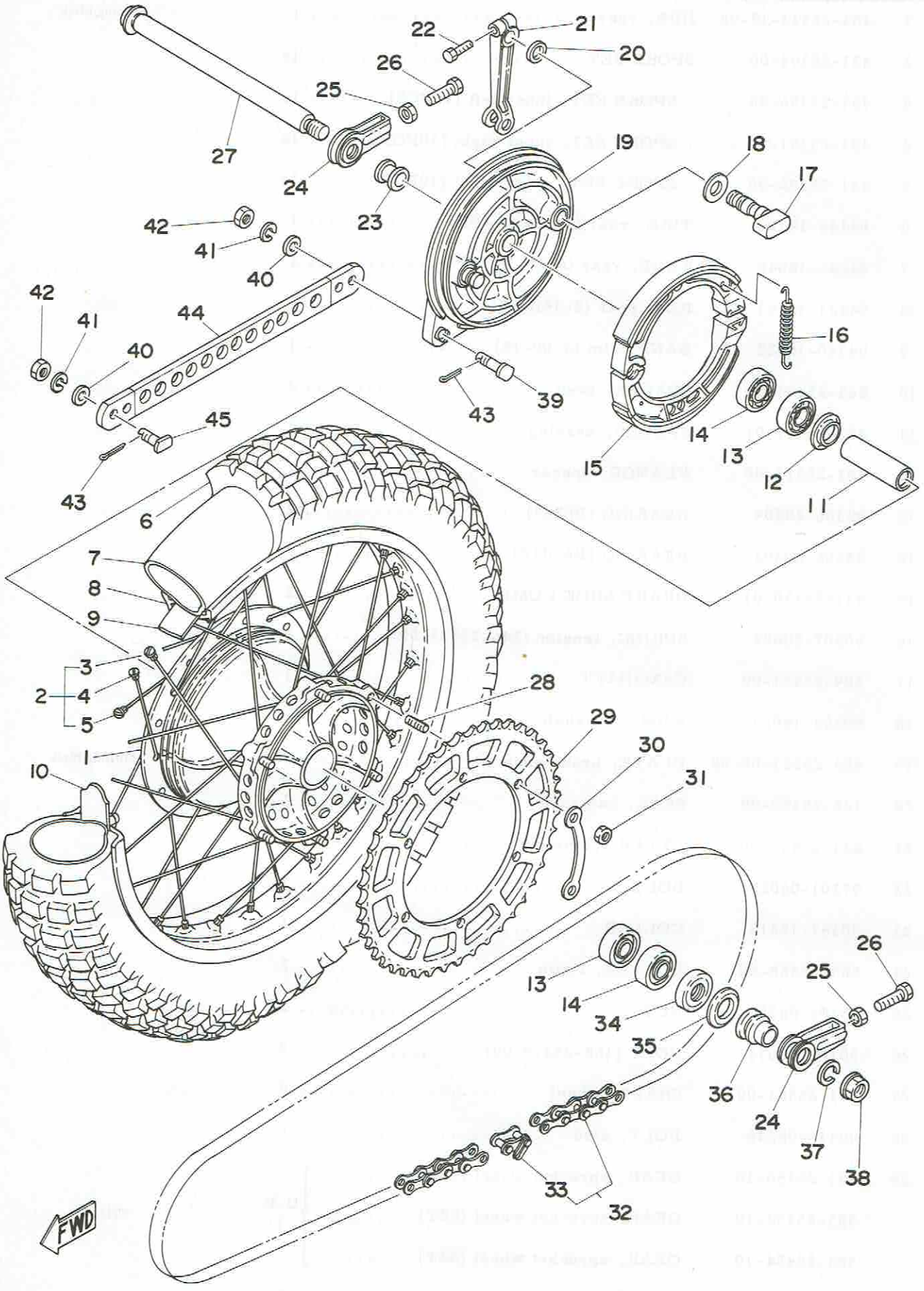

Ref. No.	Parts No.	Description	Q'ty	Applicable Machine No.	Remarks
29-31	90170-08189	NUT	6		
32	94515-20105	CHAIN (DK520T-104L)	1		
33	94615-20011	. JOINT, chain	1		
34	93102-25061	OIL SEAL (SD-25-40-8)	1		
35	431-25367-00	COVER, dust	1		
36	90387-17431	COLLAR (431-25376-01)	1		
37	92901-16100	WASHER, spring	1		
38	90170-16177	NUT	1		
39	90109-08176	BOLT	1		
40	92901-08200	WASHER, plain	2		
41	92901-08100	WASHER, spring	2		
42	95301-08700	NUT	2		
43	91401-20020	PIN, cotter	2		
44	583-25371-00	BAR, tension	1		
45	90109-08378	BOLT	1		

Fig. 30 ELECTRICAL

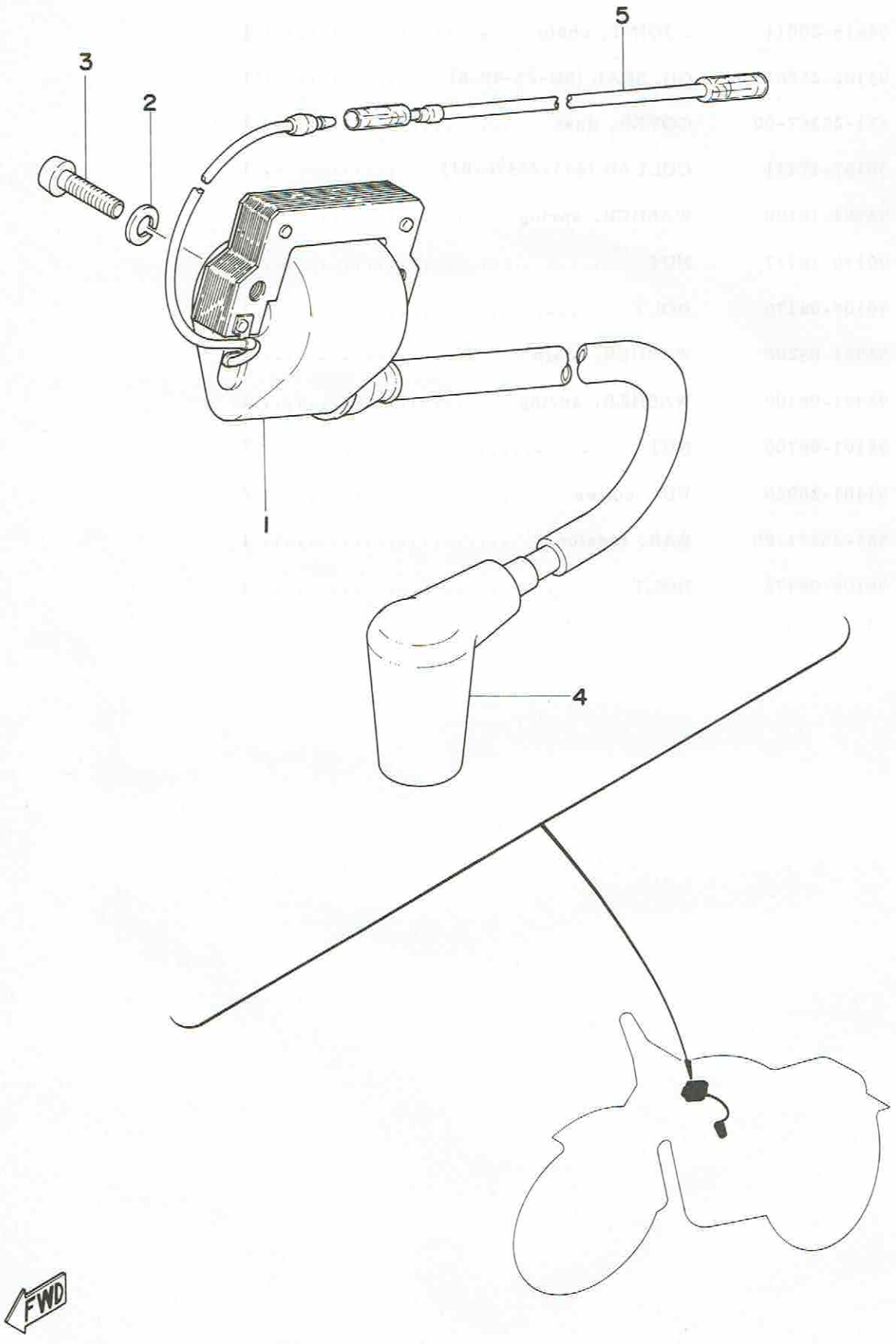

Ref. No.	Parts No.	Description	Q'ty	Applicable Machine No.	Remarks
30- 1	583-82310-50	IGNITION COIL ASS'Y	1		
2	92901-06200	WASHER, spring	2		
3	92501-06020	SCREW, panhead	2		
4	437-82370-21	PLUG CAP ASS'Y	1		
5	583-82521-00	WIRE, lead	1		

NUMERICAL INDEX

YAMAHA
PARTS

NUMERICAL INDEX

Ref No.	Parts No.
17-23	ACC-00002-71-00
17-24	ACC-00002-71-10
23-33	122-23119-01
23-32	122-23129-00
24- 7	122-23411-00
24- 5	122-23412-00
24- 8	122-23416-00
16-35	127-14134-00
16- 9	127-14186-00
13- 2	132-18113-01
16- 5	137-14143-40
16- 5	137-14143-42
16- 5	137-14143-44
12-10	137-15353-00
28-25	137-25159-00
28-13	146-25116-00
29-20	148-25359-00
14- 2	156-15618-01
24- 2	156-23411-00
24- 4	156-23412-00
25-33	156-26347-00
16-18	164-14137-00
24- 1	164-23462-00
16- 6	168-14190-25
11-10	168-17428-01-05
10- 3	170-16164-00
10-12	174-16356-00
16- 2	193-14142-35
8-20	214-11198-01
16- 7	214-14195-00
10-10	214-16119-00
10-26	214-16389-00
11-36	214-17461-50
11-36	214-17461-60
11-36	214-17461-40
28-11	214-25194-00
25-16	233-82921-31
23-13	240-23114-00
4- 3	256-12116-01
4- 7	256-12117-00
15-25	256-13564-00
13-16	278-18127-00
12- 8	278-18547-02
23-30	278-23158-50
23-31	278-23181-50
23-27	291-23167-60
16-17	316-14116-10
22- 2	322-21541-00
22-14	322-21541-00
22-13	322-21639-00
21-14	322-22153-00-33
21-22	322-22178-00
23-17	322-23341-00
23-19	322-23356-00
23-21	322-23357-00
23-35	322-23395-00
26-20	322-24500-02
26- 6	322-24611-01
27- 3	322-24748-00
28-17	322-25118-00
28-21	322-25130-00
28-24	322-25151-00
28-26	322-25155-00
4- 8	341-12118-00
4- 6	341-12119-02
5-13	341-12241-03
23- 5	341-23146-50
23- 6	341-23156-50
25-45	341-26397-01
16-36	354-14147-00
10- 6	360-16325-00
12- 6	360-18141-01
11-30	363-15381-00
14-19	363-15671-01
14-26	363-15674-00
14-21	363-15676-00
14-27	363-15686-00
10-16	363-16154-00
12-13	363-18511-00
12-16	363-18531-00
12-15	363-18535-00
29-10	363-25394-00
10-23	364-16343-00
12-12	364-18511-00
25-32	382-26372-01
25-40	382-26372-01
24-17	401-23441-00-98
21- 8	431-22151-01
23-36	431-23486-02
29- 2	431-25304-00
29-15	431-25330-01
29-21	431-25355-00
29-35	431-25367-00
29-27	431-25381-00
29- 4	431-25391-90
29- 5	431-25392-90
29- 3	431-25396-90
16-66	432-14197-00
14-25	434 15668-00
13-10	434-18121-00
12-18	434-18122-00
12- 1	434-18541-03
12- 3	434-18561-00
30- 4	437-82370-21
8-32	437-83936-00
19-61	437-83936-00
25-44	437-83936-00
21- 2	483-22124-00
21- 7	483-22129-00
28-23	483-25121-00-98
29- 1	483-25311-12-98
29-12	483-25315-00

NUMERICAL INDEX

Ref No.	Parts No.
29-11	483-25317-01
29-19	483-25321-00-98
25-31	483-26341-01
10- 7	498-16351-00
12-20	498-18151-02
20-19	498-27235-00
16-15	500-14115-00
16-53	500-14135-00
29-17	509-25351-00
29-30	509-25412-00
16-37	525-14123-00
16-14	558-14147-00
17-28	560-14791-00
1- 1	583-11110-00-R4
1-27	583-11127-00
2-13	583-11127-00
1- 3	583-11133-10
1- 4	583-11134-10
9- 2	583-11150-00
2- 8	583-11181-00
1-13	583-11186-00-R4
2- 1	583-11311-00-R4
2- 3	583-11351-00
3- 1	583-11400-00
3- 2	583-11412-00
3- 3	583-11422-00
3-20	583-11533-00
3-22	583-11536-00
3-19	583-11549-00
3-26	583-11650-00
3- 8	583-11610-00
3- 8	583-11610-10
3- 8	583-11610-20
3- 8	583-11610-30
3- 8	583-11610-40
3-25	583-11630-00
3-25	583-11630-10
3-25	583-11630-20
3-25	583-11630-30
3-25	583-11630-40
3- 7	583-11631-01-95
3- 7	583-11631-01-96
3- 9	583-11633-00
3- 7	583-11635-01
3- 7	583-11636-01
3- 7	583-11637-01
3- 7	583-11638-01
3- 4	583-11651-00
3- 6	583-11681-00
4- 1	583-12111-00
4- 2	583-12121-00
4- 9	583-12151-00
4-12	583-12156-00
5- 1	583-12171-01
5- 5	583-12176-00
5-23	583-12212-00
5-16	583-12217-00
5-11	583-12231-00
5-19	583-12232-00
5-14	583-12247-00
1-25	583-12283-00
1-23	583-12288-00
9-18	583-13113-00
8-21	583-13161-00
8- 8	583-13310-01
8-12	583-13314-00
8- 6	583-13316-01
8-11	583-13320-00
10-14	583-13324-00
8- 1	583-13325-00
8- 9	583-13336-01
8-15	583-13411-00
8-16	583-13414-00
8-17	583-13417-00
8-14	583-13440-00
7-11	583-13447-00
8-24	583-13464-00
8-28	583-13465-00
15-27	583-13556-00
15-26	583-13565-00
16- 1	583-14101-60
16-16	583-14112-45
16-51	583-14121-00
16-42	583-14131-00
16-49	583-14133-00
16- 3	583-14141-52
16- 4	583-14148-00
16-32	583-14158-00
16-52	583-14171-01
16-55	583-14174-00
16-59	583-14175-01
16-11	583-14181-00
16-10	583-14184-00
16- 8	583-14185-00
16-65	583-14197-01
16-45	583-14215-00
16-27	583-14216-00
16-43	583-14239-00
16-50	583-14245-00
16-38	583-14264-00
16-44	583-14265-00
16-22	583-14274-00
16-19	583-14291-00
16-28	583-14292-00
16-25	583-14386-00
15- 1	583-14411-01
15-10	583-14421-00
15- 5	583-14422-00
15-15	583-14431-00
15-14	583-14437-00
15-16	583-14441-00

NUMERICAL INDEX

Ref No.	Parts No.
15- 2	583-14451-00
15-22	583-14453-00
15- 3	583-14468-00
15- 4	583-14472-00
15- 9	583-14485-00
16-31	583-14536-00
16-24	583-14558-00
16-54	583-14562-00
16-39	583-14571-00
16-46	583-14573-00
16-63	583-14589-00
16-29	583-14592-00
16-60	583-14594-00
-30	583-14597-00
17- 1	583-14610-02
17-25	583-14714-00
17- 5	583-14718-01
17- 7	583-14728-01
17- 6	583-14738-00
17-17	583-14747-00
17-13	583-14757-00
17-16	583-14763-00
17-11	583-14766-00
17-22	583-14766-00
16-57	583-14918-00
16-23	583-14933-00
16-26	583-14951-00
6- 1	583-15111-00
6- 2	583-15121-00
6- 4	583-15316-00
6- 5	583-15317-01
6-21	583-15346-00
6-19	583-15347-00
6-20	583-15358-00
6-16	583-15371-00
11-12	583-15383-00

Ref No.	Parts No.
7- 1	583-15411-00
7-17	583-15417-00
7- 3	583-15421-00
7-23	583-15425-00
6- 8	583-15426-00
7- 6	583-15431-00
7- 2	583-15451-00
7-16	583-15457-00
7- 7	583-15462-00
6- 7	583-15466-00
14- 1	583-15611-00
14- 3	583-15621-00
10-15	583-15631-00
14-16	583-15641-00
11-27	583-15651-00
14-24	583-15661-00
14-14	583-15676-00
3-21	583-16111-00
10- 2	583-16150-00
10- 1	583-16301-00
10- 5	583-16321-00
10-25	583-16344-00
10-17	583-16357-01
10- 4	583-16371-00
10-18	583-16382-00
11- 7	583-17121-00
11- 5	583-17131-02
11- 2	583-17141-00
11- 6	583-17151-01
11-22	583-17211-00
11-16	583-17221-00
11-20	583-17231-01
11-21	583-17241-00
11-19	583-17251-01
11- 1	583-17411-01
11-14	583-17421-00
13- 1	583-18111-00-93

Ref No.	Parts No.
13- 8	583-18125-00
13- 4	583-18131-00
19- 1	583-21110-01-33
19-10	583-21315-00
19- 2	583-21316-00
19- 6	583-21317-00
19-23	583-21471-00
22- 1	583-21511-00
22- 7	583-21611-00
22-17	583-21629-00
19-27	583-21711-00
19-28	583-21714-00
19-35	583-21714-00
19-34	583-21721-00
22-18	583-21746-00
19-31	583-21747-00
19-38	583-21747-00
19-52	583-21755-00
19-48	583-21756-00
19-45	583-21771-00
19-33	583-21786-00
19-40	583-21787-00
21- 1	583-22110-00-33
21- 9	583-22141-00
19-56	583-22147-01
21-12	583-22210-00
23- 1	583-23101-00
23-14	583-23111-00
23- 8	583-23124-00
23- 2	583-23126-00
23- 3	583-23136-00
23-11	583-23141-00
23-12	583-23142-00
23-15	583-23144-00
23- 4	583-23145-00
23-10	583-23170-00
23- 9	583-23171-00

NUMERICAL INDEX

Ref No.	Parts No.
23-23	583-23317-00
24-15	583-23317-00
23-16	583-23318-00
23-18	583-23345-00-33
24-18	583-23389-00
24-10	583-23435-00-98
24-16	583-23469-00
23-34	583-23485-00
26- 1	583-24110-00-01
19-41	583-24181-00
26-19	583-24182-00
26- 2	583-24244-00
26- 3	583-24245-00
26- 4	583-24246-00
26- 5	583-24247-00
26- 2	583-24248-00
26- 3	583-24249-00
26- 4	583-24254-00
26- 5	583-24255-00
27-10	583-24724-00
27- 2	583-24731-00
27- 4	583-24738-00
27- 1	583-24770-00
28- 2	583-25104-00
28- 1	583-25111-00-98
28- 5	583-25179-90
28-18	583-25181-00
28- 6	583-25189-90
28- 3	583-25196-90
28- 4	583-25197-90
29-44	583-25371-00
29-24	583-25388-00
29-29	583-25450-10
29-29	583-25452-10
29-29	583-25454-10
25- 1	583-26111-00
25- 2	583-26241-00
25-27	583-26242-00
25-28	583-26243-00
25-29	583-26301-00
25-41	583-26331-00
25-39	583-26335-00
25-42	583-26352-00
25-30	583-26398-00
20-17	583-27211-00-33
20-29	583-27231-00
20-25	583-27241-00
20-30	583-27244-00
20-20	583-27252-00
20- 1	583-27311-00
20- 8	583-27411-00
20- 6	583-27412-00
20- 9	583-27421-00
20- 7	583-27422-00
19-59	583-28100-00
18- 1	583-81300-50
18- 3	583-81309-50
18- 4	583-81311-50
18- 6	583-81313-50
18- 8	583-81315-50
18- 9	583-81328-50
18- 5	583-81345-50
18- 7	583-81345-50
18-10	583-81346-50
18- 2	583-81350-50
9-11	583-81615-50
9- 8	583-81620-50
9- 9	583-81621-50
9-13	583-81625-50
9-12	583-81631-50
9-10	583-81645-50
9- 5	583-81653-50
30- 1	583-82310-50
30- 5	583-82521-00
25- 3	583-82910-01
25- 4	583-82911-01
25-15	583-82920-01
25- 5	583-83912-00
25-11	583-83913-00
25-17	583-83922-00
25-24	583-83956-00
25-25	583-83957-00
25-14	583-83976-00
25-10	583-83981-00
25-22	583-83986-00
25-23	583-83987-00
16-58	737-14137-00
16-56	802-14173-00
16-48	812-14594-00
29-26	90101-08034
5- 7	90101-10303
8-19	90101-14259
20- 2	90102-10006
19-50	90105-08003
19-19	90105-08064
19-14	90105-10039
19-17	90105-10050
19-18	90105-10051
19-16	90105-10063
24-11	90105-14060
25- 6	90109-06410
25-18	90109-06410
1-17	90109-06418
7-15	90109-06419
29-39	90109-08176
29-45	90109-08378
23-22	90109-08397
20-16	90109-10174
21-13	90109-10420
2-11	90116-08190
29-28	90116-08218

NUMERICAL INDEX

Ref No.	Parts No.
2- 5	90116-10087
2- 9	90116-10222
2-10	90116-10223
2-12	90116-10225
17-12	90119-08014
25-37	90123-08046
9-14	90147-06001
13-12	90149-06017
4-10	90149-08098
12-11	90149-14031
5-20	90149-18100
20-23	90153-06008
10- 9	90159-06010
20-24	90170-06184
4-11	90170-08173
23-26	90170-08180
29-31	90170-08189
3-16	90170-12067
21-11	90170-16111
29-38	90170-16177
3-24	90170-16182
10-11	90170-18086
28-29	90171-14006
20-33	90179-06006
17- 4	90179-08004
25-38	90179-08162
2- 6	90179-10201
1- 6	90179-10204
1- 7	90179-10207
11-38	90179-18020
5-21	90179-18199
24- 9	90179-25033
19-21	90185-08054
23-29	90185-08054
19-20	90185-10035
9- 7	90201-06060
19-30	90201-06063
19-37	90201-06063
22- 4	90201-06339
26-12	90201-06570
22-10	90201-06571
22-19	90201-06571
5-18	90201-06589
23-24	90201-08083
24-13	90201-08083
25-35	90201-08083
9- 1	90201-09572
8- 3	90201-10119
1- 8	90201-10124
19-15	90201-10126
2-14	90201-10590
5- 8	90201-10591
8- 2	90201-12166
10-24	90201-12172
20-12	90201-12174
3-14	90201-12593
13- 6	90201-14220
9- 3	90201-15234
14- 4	90201-15234
11-28	90201-17255
10-20	90201-17327
11- 8	90201-20266
11-25	90201-20266
11-23	90201-20278
14-23	90201-20278
21- 6	90201-22284
11- 3	90201-25287
11-17	90201-25287
14-17	90201-25287
14-10	90201-25290
17-15	90202-10098
19-57	90206-15023
19-22	90208-08011
3-23	90208-16019
22-12	90209-06087
26-17	90209-08097
17-18	90209-10140
13-15	90215-06016
13-17	90215-08115
11-37	90215-21022
10-27	90240-06005
25-34	90240-08012
20-26	90240-08051
20-32	90249-12069
12-14	90250-08017
3-13	90280-05013
3-17	90282-07021
25-46	90338-09012
11-15	90338-09066
1-16	90338-18067
1-21	90338-47065
6-24	90340-10003
7-20	90340-10003
1-19	90340-14038
22- 3	90387-06388
15-18	90387-07391
17-14	90387-08527
26-11	90387-09506
28-16	90387-15418
29-23	90387-17215
29-36	90387-17431
11-35	90387-25507
8-23	90401-08038
7-13	90430-05126
1-18	90430-06014
8-22	90430-08119
19-51	90430-08119
6-25	90430-09121
7-19	90430-10027
6-23	90430-10031
1-20	90430-14043

NUMERICAL INDEX

Ref No.	Parts No.
19-49	90430-22123
19-44	90430-27124
26- 7	90430-35122
17- 2	90430-38054
6-17	90445-07039
26- 9	90445-09111
26-22	90445-11288
19-47	90445-11289
19-60	90446-07114
6-18	90460-22083
15-21	90460-58015
15-23	90460-61063
6-22	90460-71017
17-26	90461-14019
6-15	90465-05075
6-13	90465-05084
8-31	90465-06077
19-55	90465-06086
7-26	90465-08076
19-54	90465-08090
19-46	90467-10008
26- 8	90467-10008
26-21	90467-11010
25-43	90468-15009
19-32	90480-01176
19-39	90480-01176
15-17	90480-14102
26-18	90480-22054
26-10	90480-22177
9-16	90501-05378
12- 9	90501-10062
20-31	90501-10245
14- 7	90501-12081
5-17	90501-14095
14-20	90501-23143
10- 8	90501-23391
4- 5	90501-29376
4- 4	90501-42377
28-22	90506-16036
29-16	90507-20002
20- 5	90507-29009
12-19	90508-08008
10-19	90508-12279
1-24	90508-12281
20-11	90508-26276
20-10	90508-26277
13- 9	90508-32052
20-21	90508-32278
14-13	90508-32280
21-23	90560-06003
28-12	90560-15116
10-13	90560-25153
14-12	90560-25154
29-18	90564-14021
13- 3	91101-06020
8-27	91316-06012
8-26	91316-06015
8-29	91316-06015
1-15	91316-06018
8-18	91316-06020
15-24	91316-06020
1-12	91316-06025
7- 4	91316-06025
7-18	91316-06025
2- 7	91316-06030
7-24	91316-06030
6-10	91316-06035
7- 5	91316-06035
7-25	91316-06040
6-11	91316-06045
1-11	91316-06055
6-12	91316-06060
7-12	91316-06060
10-28	91401-10010
20-27	91401-20012
25-36	91401-20012
29-43	91401-20020
20- 4	91401-20025
28-19	91401-30030
19-29	91609-25018
19-36	91609-25018
20-13	91609-30020
6- 3	91810-05016
7- 8	91810-05016
1- 5	91810-16016
2- 4	91810-16016
17- 8	91906-06012
6-14	92501-06012
16-61	92501-06012
5-12	92501-06015
16-12	92501-06015
18-11	92501-06015
6- 9	92501-06018
22-11	92501-06018
30- 3	92501-06020
8- 7	92501-06030
11-13	92701-06015
16-21	92901-04100
16-34	92901-04100
15- 7	92901-05100
16-41	92901-05100
19-42	92901-05100
15- 8	92901-05200
13-14	92901-06100
15-12	92901-06100
15-19	92901-06100
16-13	92901-06100
16-62	92901-06100
17- 9	92901-06100
19-25	92901-06100
21-15	92901-06100

NUMERICAL INDEX

Ref No.	Parts No.
22- 5	92901-06100
22- 9	92901-06100
22-15	92901-06100
22-20	92901-06100
25- 8	92901-06100
25-20	92901-06100
26-13	92901-06100
27- 5	92901-06100
9-15	92901-06200
17-10	92901-06200
30- 2	92901-06200
15-13	92901-06600
19-26	92901-06600
21-18	92901-06600
20-28	92901-08084
16-47	92901-08100
17-31	92901-08100
19- 4	92901-08100
19- 8	92901-08100
19-12	92901-08100
20-15	92901-08100
23-25	92901-08100
24-19	92901-08100
26-16	92901-08100
27- 8	92901-08100
29-41	92901-08100
17-30	92901-08200
29-40	92901-08200
1-10	92901-08600
19- 5	92901-08600
19- 9	92901-08600
19-13	92901-08600
23-28	92901-08600
27- 9	92901-08600
17-19	92901-10100
23-20	92901-10100
3-15	92901-12100
28-28	92901-14200
21-10	92901-16100
29-37	92901-16100
7-21	93101-14075
9- 4	93102-15147
10-21	93102-17148
28-15	93102-20009
29-34	93102-25061
14- 9	93102-25064
3-12	93102-30145
11-33	93102-35146
8- 5	93104-11038
1-22	93104-12054
21- 4	93108-35004
13- 7	93109-14010
7-10	93210-07135
8-25	93210-10197
6- 6	93210-12095
5-15	93210-12152
1- 2	93210-14299
8-30	93210-15171
11-34	93210-22298
5-22	93210-32172
7-22	93210-35173
1-14	93210-49296
7- 9	93210-64297
2- 2	93210-92295
23-37	93210-99184
11-11	93304-20501
5- 2	93306-00502
5- 3	93306-00506
28-20	93306-20203
28-14	93306-20205
29-14	93306-20303
29-13	93306-20309
11-32	93306-30517
3-11	93306-30616
3-18	93306-30702
3- 5	93310-635A5
11- 9	93311-42012
11-26	93313-32008
10-22	93315-11720
21- 3	93317-22208
21- 5	93342-22205
8- 4	93410-10025
19-58	93410-15005
11-29	93410-17008
14-22	93410-19015
11-24	93410-20038
14-11	93410-25010
12- 7	93410-30012
12-21	93430-07012
12-17	93430-08006
13-11	93430-10016
14- 5	93430-10016
13- 5	93430-12009
14-15	93440-25019
11- 4	93440-25020
11-18	93440-25020
14-18	93440-25020
5- 4	93440-47044
3-10	93450-22027
23- 7	93450-30039
24- 3	93501-04011
16-64	93501-08001
9-17	93503-08007
24- 6	93503-16010
14- 6	93507-32009
8-13	93603-17070
12- 5	93604-08071
5- 6	93604-10011
12- 2	93604-18100
8-10	93604-22050
20-22	93700-06001

NUMERICAL INDEX

Ref No.	Parts No.
21-24	93700-06001
28- 7	94130-21096
29- 6	94146-18109
28- 8	94230-21038
29- 7	94246-18040
28-10	94327-21024
29- 9	94340-18022
28- 9	94416-21150
29- 8	94421-18151
5- 9	94500-02106
29-32	94515-20105
5-10	94600-02001
29-33	94615-20011
1-26	94701-00117
13-13	95301-06600
21-19	95301-06600
29-42	95301-08700
17-20	95301-10600
20- 3	95302-10900
22-16	95303-06800
1- 9	95303-08600
29-25	95303-08700
25-13	95601-05100
21-21	95601-06100
25- 9	95601-06100
25-21	95601-06100
17-27	95601-08100
24-14	95601-08100
17- 3	95621-08615
17-21	97301-06010
21-16	97301-06010
19-24	97301-06012
9- 6	97301-06015
15-11	97301-06015
27- 6	97301-06015
20-18	97301-06020
25- 7	97301-06022
25-19	97301-06022
15-20	97301-06025
28-27	97301-06025
29-22	97301-06025
22- 6	97301-06030
21-20	97301-06040
21-17	97301-06050
26-15	97301-08015
17-29	97301-08016
20-14	97301-08025
24-12	97313-08055
22- 8	97321-06014
22-21	97321-06014
14-28	97321-06015
26-14	97321-06030
27- 7	97321-08015
19-11	97321-08018
19- 3	97321-08025
19- 7	97321-08025
14- 8	97321-08030
24-20	97323-08035
19-53	97701-50110
16-20	98501-04012
15- 6	98501-05012
16-40	98501-05012
19-43	98501-05012
25-12	98501-05018
25-26	98501-05018
16-33	98503-04015
11-31	98701-05012
12- 4	98701-05012
7-14	98906-05008
Ref No.	Parts No.

YAMAHA MOTOR CO., LTD.
PRINTED IN JAPAN
First edition Aug., 1975
(LIT-10015-83-00)(583-28198-60)